This document is the absolute property of R&M Materials Handling, Inc. This document must not be copied without the written permission of R&M Materials Handling, Inc.
The contents thereof must not be disclosed to a third party nor be used for any unauthorized purpose. Contravention will be prosecuted.

Included in

RTN20 END TRUCK SIDE JOINT PLATE TYPE R

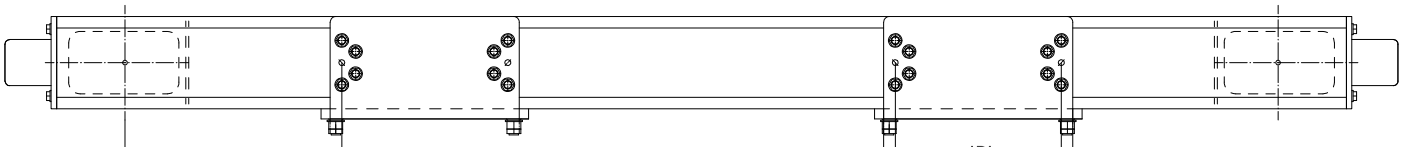

JOINT PLATE BOLT
TIGHTENING TORQUE
M16 Bolt - Torque to 221 ft-lb
M20 Bolt - Torque to 427 ft-lb

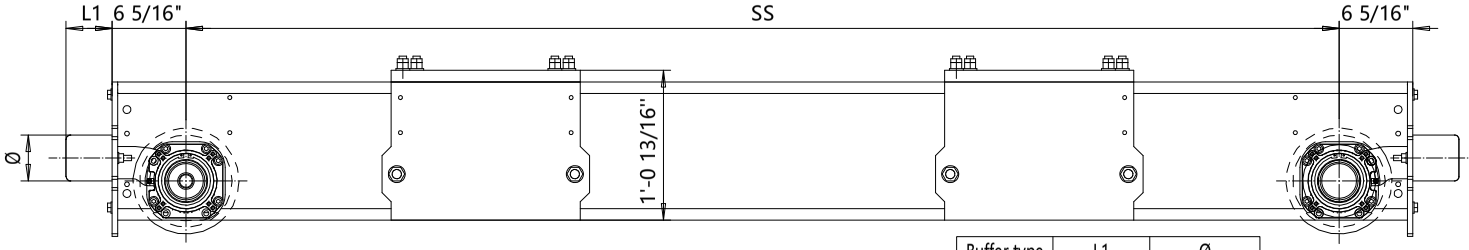

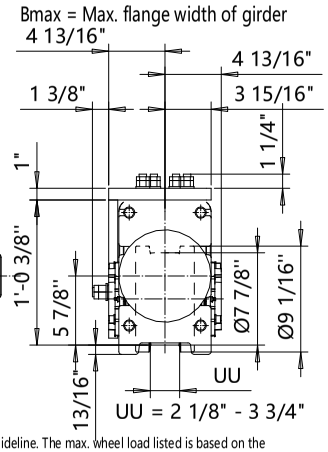

Product Code example

RTN20-2574-R40840C0000-N

- N=standard, E=Special
- -primer paint, color code
- (not in use with RTN20)
- Buffer type
- Joint plate distance (pin to pin, with double DG girder)
  (driving wheel to pin with asymmetrical single SG girder)
- Joint plate code
- - =1WD, D =2WD (Number of driving wheels/end carriage)
- Wheel groove =UU
- Wheel base =SS
- - =std, C=asymmetrical joint
- Type of end carriage

Buffer type	L1	Ø
A	2 3/16"	2 1/2"
B	2 11/16"	3 3/16"
C	3 5/16"	3 15/16"
D	4 1/8"	4 15/16"
K	3 3/16"	3 3/16"
G	3 15/16"	3 15/16"
E	5 15/16"	3 15/16"
F	7 1/2"	4 15/16"
H	6 5/16"	6 5/16"
I	7 7/8"	7 7/8"
M	4 15/16"	4 15/16"
P	9 7/16"	6 5/16"
S	11 13/16"	7 7/8"
B, C, D rubber		
K, G, E, F, H, I, M, P, S polyurethane		

The wheel loads listed are only a guideline. The max. wheel load listed is based on the structural integrity of the frame and load placement, and it does not take into account permissible wheel loading or bearing life. SG load placement is at the center, and DG load placement is for a trolley gage of 1400 mm [55 1/8"].
The permissible dynamic wheel load listed is based on assumptions that the bridge speed is 40 m/min [130 fpm], end truck duty is Fem 2m, and the runway rail as listed.
The actual wheel load should not exceed the permissible wheel load. If the permissible dynamic wheel load is greater than the maximum dyn wheel load, then the actual wheel load cannot exceed maximum dyn wheel load.
Dyn wheel load = 1.15 x static wheel load

Joint plate	Min. Wheelbase	JPL	B max
	Trolley gage = 47.25"		
R3	8'-2 7/16"; DG	9.84"	11 13/16"
R4	8'-2 7/16"; DG	14.17"	16 1/8"
R5	8'-2 7/16"; DG	18.5"	20 1/2"
R6	8'-2 7/16"; DG	22.83"	24 13/16"

Whlbase	SS	Max dyn whl load, (kip)		Perm dyn whl load, (kip)		Approx. Wgt / trk, lb	
code		SG	DG	ASCE 60#	ASCE 85#	SG	DG
16	5'-3"	29.7	29.7	19.8	22	556	650
20	6'-6 3/4"	29.7	29.7	19.8	22	619	714
25	8'-2 7/16"	29.7	29.7	19.8	22	700	795
32	10'-4"	25.2	29.7	19.8	22	804	898
40	13'-1 1/2"	16.88	19.13	19.8	22	940	1035
45	14'-9 3/16"	11.93	13.28	19.8	22	1020	1114

Pos	Description	Specification	Id	Drawing
ETTVPH Design		ETTVPH Chd	Appd	Ref Drawing
2008-05-23 Date		END TRUCK OUTLINE DRAWING		1:10
Dept		RTN20-R		Folder ECN20
R&M MATERIALS HANDLING		RTN20 END TRUCK SIDE JOINT		Issue 08/2025