This document is the absolute property of R&M Materials Handling, Inc. This document must not be copied without the written permission of R&M Materials Handling, Inc.
The contents thereof must not be disclosed to a third party nor be used for any unauthorized purpose. Contravention will be prosecuted.

Included in				
Rev	Explanation	Date	Revised by	Checked by

RTN25 END TRUCK SIDE JOINT PLATE TYPE F

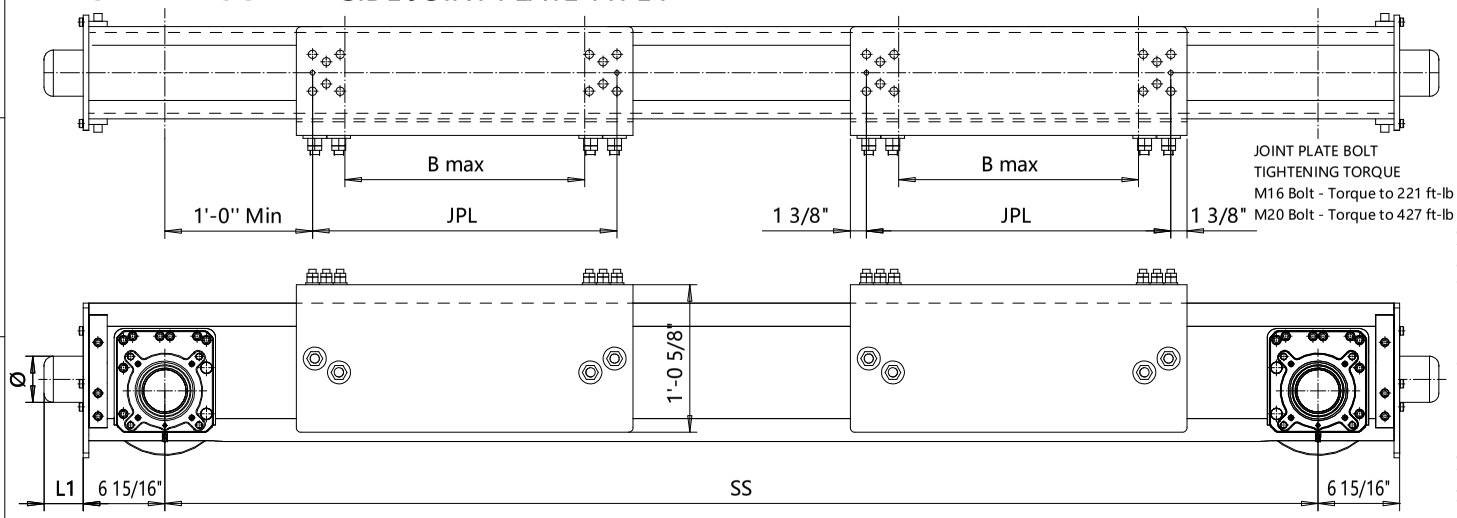

JOINT PLATE BOLT
TIGHTENING TORQUE
M16 Bolt - Torque to 221 ft-lb
M20 Bolt - Torque to 427 ft-lb

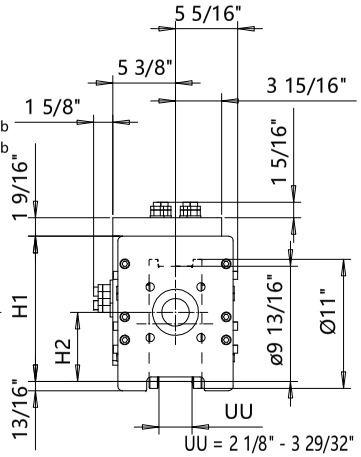

Wheelbase	SS	Max dyn whl load, (kip)		Perm dyn whl load, (kip)		Approx. Wt./Trk, lb		H1		H2	
code		SG	DG	ASCE 60	ASCE85	SG	DG	SG	DG	SG	DG
20	6'-6 3/4"	41.63	-	25.8	28.4	979	-	12 3/8"	-	5 15/16"	-
25	8'-2 7/16"	38.48	41.63	25.8	28.4	1076	1316	12 3/8"	12 3/8"	5 15/16"	5 15/16"
32	10'-4"	38.25	41.63	25.8	28.4	1355	1595	16 3/8"	12 3/8"	5 15/16"	5 15/16"
40	13'-1 1/2"	35.55	41.63	25.8	28.4	1558	1798	16 3/8"	16 3/8"	5 15/16"	5 15/16"
45	13'-1 1/2"	28.8	31.28	25.8	28.4	1677	1917	16 3/8"	16 3/8"	5 15/16"	5 15/16"
50	16'-4 7/8"	31.05	40.95	25.8	28.4	2145	2386	16 9/16"	16 9/16"	6 1/8"	6 1/8"
55	18'-1/2"	28.13	30.38	25.8	28.4	2297	2538	16 9/16"	16 9/16"	6 1/8"	6 1/8"

Buffer type	L1	Ø
B	2 11/16"	3 3/16"
C	3 5/16"	3 15/16"
D	4 1/8"	4 15/16"
K	3 3/16"	3 3/16"
G	3 15/16"	3 15/16"
E	5 15/16"	3 15/16"
F	7 1/2"	4 15/16"
H	6 5/16"	6 5/16"
I	7 7/8"	7 7/8"
M	4 15/16"	4 15/16"
P	9 7/16"	6 5/16"
S	11 13/16"	7 7/8"
B, C, D rubber		
K, G, E, F, H, I, M, P, S polyurethane		

Product Code example

RTN25-2570-F50541C0000-N

- N=standard, E=Special
- -primer paint, color code (not in use with RTN25)
- Buffer type
- Joint plate distance (DG)
- Joint plate code
- - =1WD, D =2WD (per truck)
- Wheel groove =UU
- Wheel base =SS
- - =std, C=asymmetrical joint
- Type of end carriage

Joint plate	JPL	B max	Min. Wheelbase
			Trolley gage = 47.25"
F4	18.9"	15 3/8"	8'-2 7/16"; DG
F5	25.98"	20 1/2"	8'-2 7/16"; DG
F7	35.04"	29 1/2"	10'-4"; DG
F8	40.55"	35"	10'-4"; DG

The wheel loads listed are only a guideline. The max. wheel load listed is based on the structural integrity of the frame and load placement, and it does not take into account permissible wheel loading or bearing life. SG load placement is at the center, and DG load placement is for a trolley gage of 1400 mm [55 1/8"].
The permissible dynamic wheel load listed is based on assumptions that the bridge speed is 40 m/min [130 fpm], end truck duty is Fem 2m, and the runway rail as listed.
If permissible dynamic wheel load is greater than the maximum dyn wheel load, use maximum dyn wheel load to select the end truck.
Dyn wheel load = 1.15 x static wheel load

Pos	Description	Specification	Id	Drawing
ETTPIA Design	ETTPIA Chd	Appd	Ref Drawing	
2008-08-11 Date	END TRUCK			1:7
SLEQDOCV Dept	OUTLINE DRAWING			Folder ECN25
	RTN25-F			
	RTN25 END TRUCK SIDE JOINT			Issue 08/2025

R&M MATERIALS HANDLING