This document is the absolute property of R&M Materials Handling, Inc. This document must not be copied without the written permission of R&M Materials Handling, Inc.
The contents thereof must not be disclosed to a third party nor be used for any unauthorized purpose. Contravention will be prosecuted.

Rev	Explanation	Date	Revised by	Checked by

RTN25B END TRUCK SIDE JOINT PLATE TYPE F

JOINT PLATE BOLT
TIGHTENING TORQUE
M16 Bolt - Torque to 221 ft-lb
M20 Bolt - Torque to 427 ft-lb

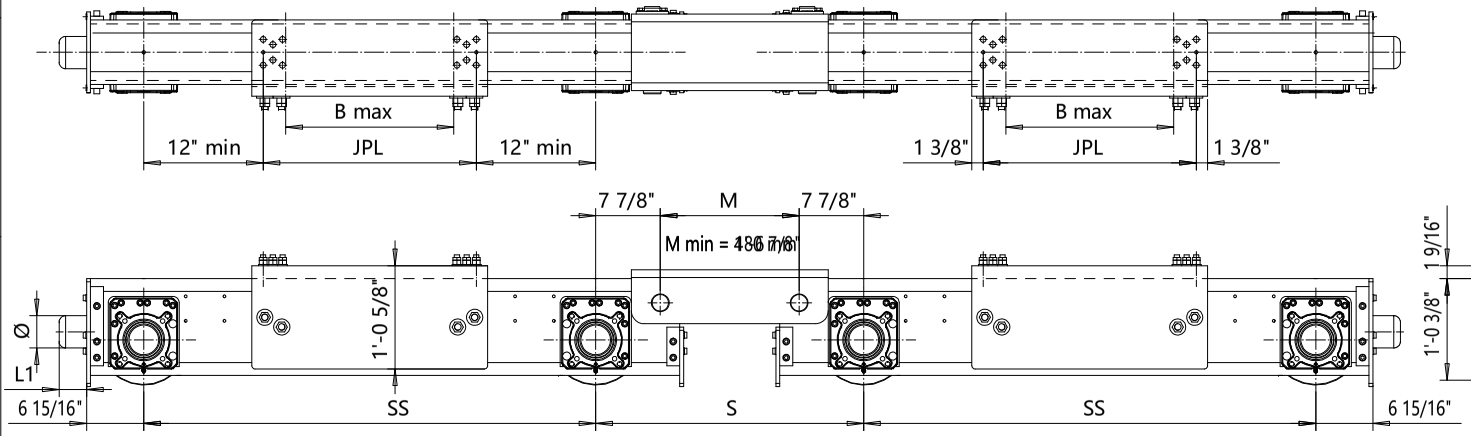

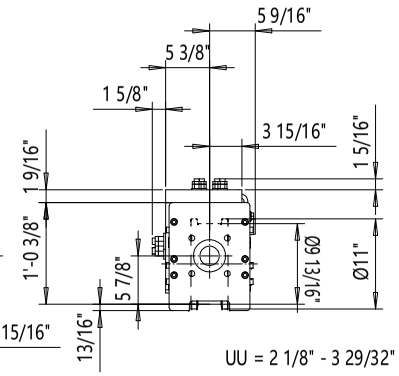

RTN25B1474-F51570C0830-N

- N=standard, E=Special
- -primer paint, color code
- Inner wheel distance =S
- Buffer type
- Joint plate distance =PP; (pin to pin, with double girder)
- Joint plate code
- - =1WD, D =2WD
- Wheel groove =UU
- Wheel base =SS
- - B =bogie
- Type of end carriage

Joint plate	JPL	B max	Min. Wheelbase
F4	18.9"	15 3/8"	4'-7 1/8"
F5	25.98"	20 1/2"	4'-7 1/8"
F7	35.04"	29 1/2"	5'-3"
F8	40.55"	35"	5'-10 7/8"

The wheel loads listed are only a guideline. The max. wheel load listed is based on the structural integrity of the frame and load placement, and it does not take into account permissible wheel loading or bearing life. SG load placement is at the center, and DG load placement is for a trolley gage of 1400 mm [55 1/8"].
The permissible dynamic wheel load listed is based on assumptions that the bridge speed is 40 m/min [130 fpm], end truck duty is Fem 2m, and the runway rail as listed.
If permissible dynamic wheel load is greater than the maximum dyn wheel load, use maximum dyn wheel load to select the end truck.
Dyn wheel load = 1.15 x static wheel load

Buffer type	L1	Ø
B	2 11/16"	3 3/16"
C	3 5/16"	3 15/16"
D	4 1/8"	4 15/16"
K	3 3/16"	3 3/16"
G	3 15/16"	3 15/16"
E	5 15/16"	3 15/16"
F	7 1/2"	4 15/16"
H	6 5/16"	6 5/16"
I	7 7/8"	7 7/8"
M	4 15/16"	4 15/16"
P	9 7/16"	6 5/16"
S	11 13/16"	7 7/8"
B, C, D rubber		
K, G, E, F, H, I, M, P, S polyurethane		

Wheelbase	SS	Max dyn whl load	Permissible dyn whl load, (kip)			Approx Weight
code		(kip)	ASCE 40	ASCE 60	ASCE85	(lb)
14	4'-7 1/8"	41.63	19.1	25.8	28.4	1470
16	5'-3"	41.63	19.1	25.8	28.4	1548
18	5'-10 7/8"	41.63	19.1	25.8	28.4	1625
20	6'-6 3/4"	41.63	19.1	25.8	28.4	1704
22	7'-2 5/8"	41.63	19.1	25.8	28.4	1781
25	8'-2 7/16"	38.48	19.1	25.8	28.4	1898

Pos	Description	Specification	Id	Drawing

ETTVPH Design	Chd	Appd	Ref Drawing
2008-12-09 Date	END TRUCK		1:10
SLEQDOCV Dept	OUTLINE DRAWING		Folder ECN25
R&M MATERIALS HANDLING	RTN25B-F		
	RTN25B END TRUCK SIDE JOINT		Issue 08/2025

D005772-A
A2