This document is the absolute property of R&M Materials Handling, Inc. This document must not be copied without the written permission of R&M Materials Handling, Inc.
The contents thereof must not be disclosed to a third party nor be used for any unauthorized purpose. Contravention will be prosecuted.

Included in				
Rev	Explanation	Date	Revised by	Checked by

RTN32B END TRUCK TOP JOINT PLATE TYPE K

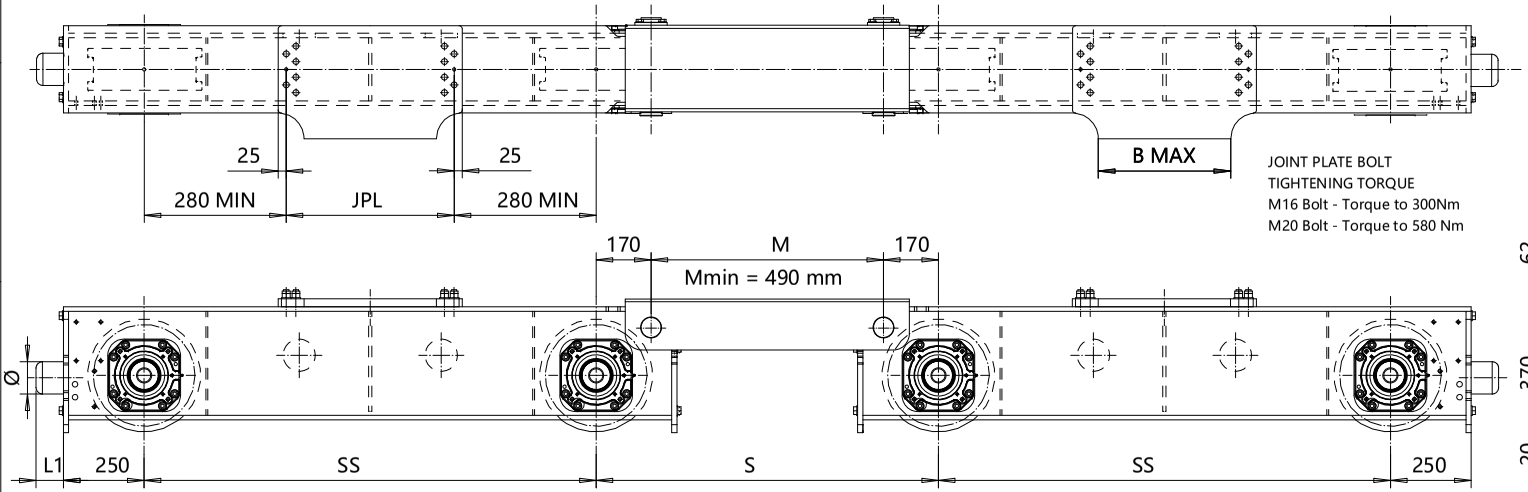

JOINT PLATE BOLT
TIGHTENING TORQUE
M16 Bolt - Torque to 300Nm
M20 Bolt - Torque to 580 Nm

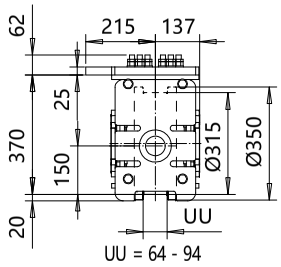

Product Code example

RTN32B1474-K41940C1060-N

- N=standard, E=Special
- -primer paint, color code
- Inner wheel distance, mm
- Buffer type
- Joint plate distance, mm (pin to pin, with DG)
- Joint plate code
- - =1WD, D =2WD (Number of driving wheels/truck)
- Wheel groove = UU, mm
- Wheel base = SS, mm
- - =std, B=bogie
- Type of end carriage

Joint plate	JPL	B max
	(mm)	(mm)
K4	520	410
K5	630	520
K7	850	740
K9	1100	990

Minimum wheelbase with K9 joint plate is 1600 mm.

The wheel loads listed are only a guideline. The max. wheel load listed is based on the structural integrity of the frame and load placement, and it does not take into account permissible wheel loading or bearing life. Load placement is assumed at the center of each truck.
The permissible dynamic wheel load listed is based on assumptions that the bridge speed is 40 m/min [130 fpm], end truck duty is Fem 2m, and the runway rail is as listed.
The actual wheel load should not exceed the permissible wheel load. If the permissible dynamic wheel load is greater than the maximum dyn wheel load, then the actual wheel load cannot exceed maximum dyn wheel load.
Dynamic wheel load = 1.15 x static wheel load

Buffer type	L1, (mm)	Ø, (mm)
B	68	80
C	85	100
D	105	125
E	150	100
F	190	125
H	160	160
I	200	200
M	125	125
P	240	160
S	300	200
T	350	250
Y	475	250
B, C, D rubber		
E, F, H, I, M, P, S, T, Y polyurethane		

Wheelbase	SS	Max dyn whl load	Permissible dyn whl load, (kN)				Approx Wt./Trk, kg
code	(mm)	(kN)	ASCE 40	ASCE 60	ASCE 85	BETH 135	
14	1400	253	112	150	166.5	219	1032
16	1600	253	112	150	166.5	219	1085
18	1800	253	112	150	166.5	219	1137
20	2000	253	112	150	166.5	219	1189

Pos	Description	Specification	Id	Drawing
ETTPIA Design	ETTPIA Chd	Appd	Ref Drawing	
2008-08-11 Date	END TRUCK			1 : 10
SLEQDOCV Dept	OUTLINE DRAWING			Folder ECN32
	RTN32B-K			
	RTN32B END TRUCK TOP JOINT			Issue 08/2025