This document is the absolute property of R&M Materials Handling, Inc. This document must not be copied without the written permission of R&M Materials Handling, Inc.
The contents thereof must not be disclosed to a third party nor be used for any unauthorized purpose. Contravention will be prosecuted.

Included in				
Rev	Explanation	Date	Revised by	Checked by

RTN40B END TRUCK TOP JOINT PLATE TYPE K

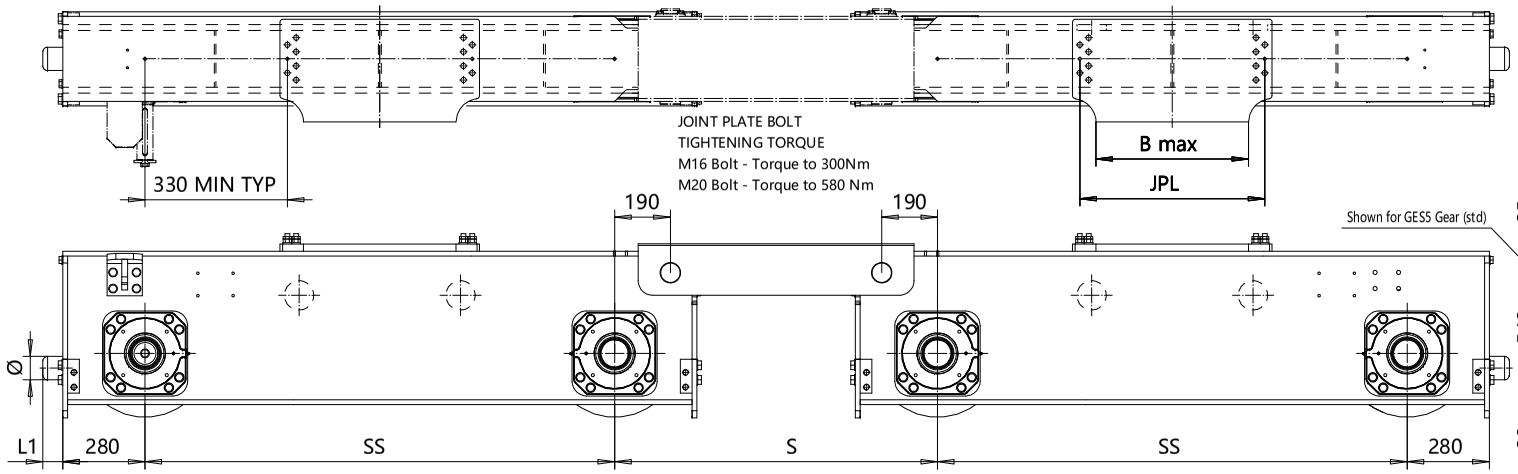

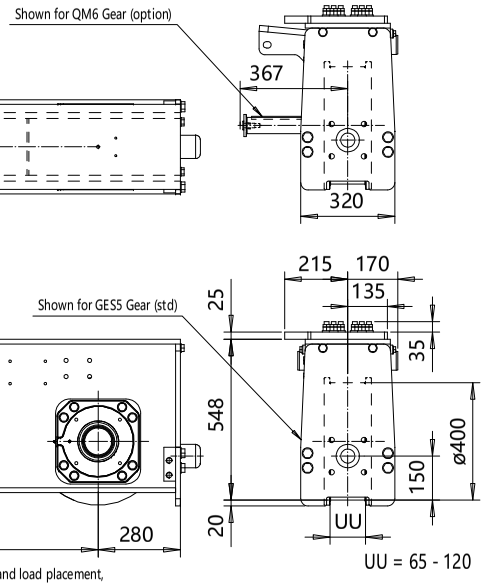

The wheel loads listed are only a guideline. The max. dyn. wheel load listed is based on the structural integrity of the frame and load placement, and it does not take into account permissible wheel loading or bearing life. The load placement is at the center of each truck. The permissible dynamic wheel load listed is based on assumptions that the bridge speed is 32 m/min [100 fpm], end truck duty is Fem 2m, and the runway rail as listed. The actual wheel load should not exceed the permissible wheel load. If the permissible dynamic wheel load is greater than the maximum dyn wheel load, then the actual wheel load cannot exceed maximum dyn wheel load.
Dyn wheel load = 1.15 x static wheel load.

Product Code example

RTN40B1675-S62180C1100-N

- N=standard, E=Special
- -primer paint, color code
- Inner wheel distance (S), 1000 mm [39.37"] min.
- Buffer type
- Joint plate distance (pin to pin, with double DG girder)
- Joint plate code
- - =1WD, D =2WD (Number of driving wheels/end carriage)
- Wheel groove =UU
- Wheel base =SS
- B = Bogie
- Type of end carriage

Joint plate	JPL	B max	Weight/pc
	(mm)	(mm)	(kg)
K4	520	410	39
K5	630	520	47
K7	850	740	62
K9	1100	990	79

Minimum wheelbase with K9 joint plate is 3150 mm.

Buffer type	L1, (mm)	Ø, (mm)
B	68	80
C	85	100
D	105	125
E	150	100
F	190	125
H	160	160
I	200	200
M	125	125
P	240	160
S	300	200
T	350	250
Y	475	250
B, C, D rubber		
E, F, H, I, M, P, S, T, Y polyurethane		

*Approximate weight of end truck assumes GES5 drive wheel, K5 joint plate, and bogie connector for S = 1100 mm. QM6 drive parts adds extra weight.

Item	Weight, kg
QM6	33
Bogie connector	58 kg + (0.091 * (S-620))

Wheelbase	SS	Max dyn whl load, (kN)	Perm dyn whl load, (kN)			Approx. Wt.*/Bogie Trk
code	(mm)	DG	ASCE 60	ASCE 85	BETH 135	(kg)
16	1600	350	203.3	224.5	296	1733
18	1800	350	203.3	224.5	296	1825
20	2000	350	203.3	224.5	296	1919
22	2200	350	203.3	224.5	296	2011
25	2500	350	203.3	224.5	296	2151

ETTPIA Design	ETTPIA Chd	Appd	Ref Drawing
2008-08-11 Date	END TRUCK		1 : 7
SLEQDOCV Dept	OUTLINE DRAWING		Folder ECN40B
	RTN40B-K		
	RTN40B END TRUCK TOP JOINT		Issue 08/2025