This document is the absolute property of R&M Materials Handling, Inc. This document must not be copied without the written permission of R&M Materials Handling, Inc.
The contents thereof must not be disclosed to a third party nor be used for any unauthorized purpose. Contravention will be prosecuted.

# RTN50B END TRUCK TOP JOINT PLATE TYPE J

Minimum Inner Wheel Distance (S)=1400 mm for wheel change
M = S - 540 mm
Mmin = 860 mm for wheel change
Mmax = 5000 mm

Approx. Wgt (kg) = Weight/trk * 2 + 106 kg + 123 kg/m * (S - 0.9m)
Approx. Wgt (lbs) = Weight/trk * 2 + 234 lbs + 83 lbs/ft * (S - 3 ft)
Weight/trk is calculated with buffer type B.

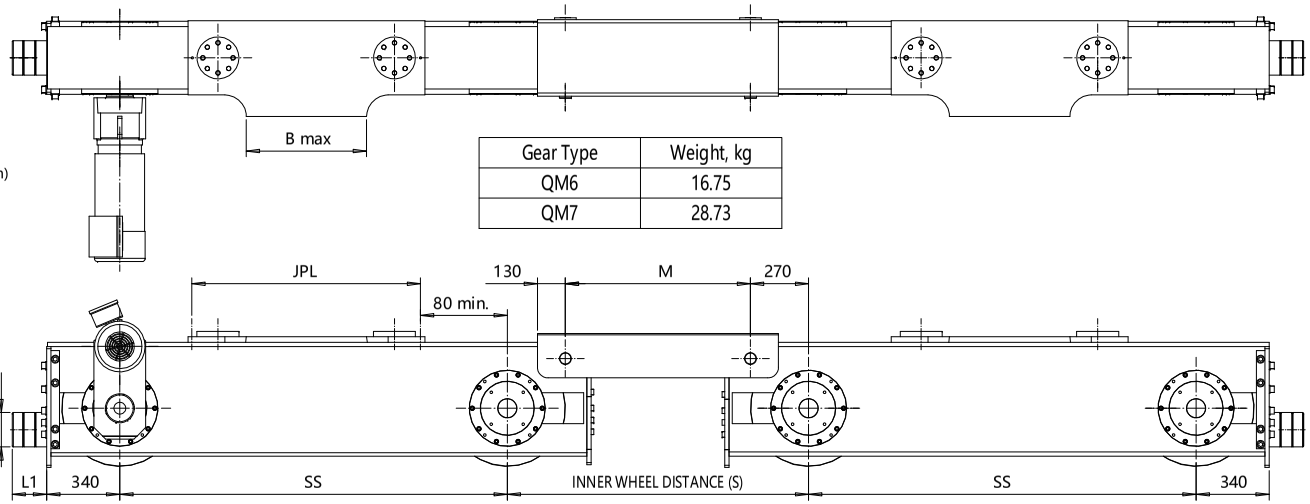


| Gear Type | Weight, kg |
|---|---|
| QM6 | 16.75 |
| QM7 | 28.73 |

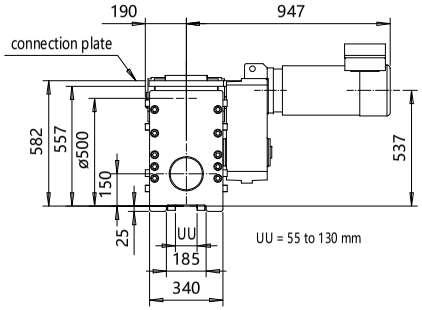


The wheel loads listed are only a guideline. The max. dyn. wheel load listed is based on the structural integrity of the frame and load placement, and it does not take into account permissible wheel loading or bearing life. The load placement is at the center of each truck. The permissible dynamic wheel load listed is based on assumptions that the bridge speed is 32 m/min [100 fpm], end truck duty is ISO M5 (FEM 2m), and the runway rail as listed. The actual wheel load should not exceed the permissible wheel load. If the permissible dynamic wheel load is greater than the maximum dyn wheel load, then the actual wheel load cannot exceed maximum dyn wheel load.
Dyn wheel load = 1.15 x static wheel load.

Product Code example

RTN50B1899SJ72207H1400-N

- N=standard, E=Special
- -primer paint, color code
- Inner wheel distance (S), 1400 mm min.
- Buffer type
- Joint plate distance (pin to pin, with double DG girder)
- Joint plate code
- S =1WD, D =2WD (Number of driving wheels)
- Wheel groove =UU
- Wheel base =SS
- B = Bogie
- End truck model

| Joint plate | JPL | B max | Weight/pc |
|---|---|---|---|
| | (mm) | (mm) | (kg) |
| J1 | 940 | 490 | 83 |
| J2 | 1190 | 745 | 107 |
| J3 | 1540 | 1045 | 136 |
| J4 | 1040 | 490 | 101 |
| J5 | 1260 | 745 | 103 |
| J6 | 1640 | 1045 | 155 |
| J7 | 1060 | 610 | 96 |
| J8 | 1160 | 610 | 112 |
| J9 | 1310 | 860 | 121 |
| J0 | 1410 | 860 | 135 |

| Buffer type | L1, (mm) | Ø, (mm) | Wgt/pc, kg |
|---|---|---|---|
| B | 68 | 80 | 0.8 |
| C | 85 | 100 | 1.4 |
| D | 105 | 125 | 2.5 |
| E | 150 | 100 | 1.0 |
| F | 190 | 125 | 1.6 |
| H | 160 | 160 | 2.5 |
| I | 200 | 200 | 4.4 |
| M | 125 | 125 | 0.9 |
| P | 240 | 160 | 3.1 |
| S | 300 | 200 | 5.6 |
| T | 350 | 250 | 7.6 |
| Y | 475 | 250 | 10.3 |
| B, C, D rubber | | | |
| E, F, H, I, M, P, S, T, Y polyurethane | | | |

| Wheelbase | SS | Max dyn whl load, (kN) | Perm dyn whl load, (kN) | | | Approx. Wt.*/Trk |
|---|---|---|---|---|---|---|
| code | (mm) | DG | ASCE 85 | BETH 135 | BETH 171 | (kg) |
| 16 | 1600 | 520 | 288.8 | 380.8 | 493 | 1086 |
| 18 | 1800 | 520 | 288.8 | 380.8 | 493 | 1136 |
| 20 | 2000 | 520 | 288.8 | 380.8 | 493 | 1186 |
| 22 | 2200 | 520 | 288.8 | 380.8 | 493 | 1236 |
| 25 | 2500 | 520 | 288.8 | 380.8 | 493 | 1311 |

| | | | |
|---|---|---|---|
| ETTPIA Design | ETTPIA Chd | Appd | Ref Drawing |
| 2008-08-11 Date | END TRUCK | | 1 : 7 |
| SLEQDOCV Dept | OUTLINE DRAWING | | Folder ECN50B |
| | RTN50B-J | | |
| | RTN50B END TRUCK TOP JOINT | | Issue 08/2025 |