This document is the absolute property of R&M Materials Handling, Inc. This document must not be copied without the written permission of R&M Materials Handling, Inc.
The contents thereof must not be disclosed to a third party nor be used for any unauthorized purpose. Contravention will be prosecuted.

RU20 UNDER RUNNING END TRUCK

Wheelbase, SS	Max Dyn. Corner Load	L	Approx Wt.	H
(mm)	(kN)	(mm)	(kg)	(mm)
1800	143.8	2480	717	360
2300	143.8	2980	776	360
2800	143.8	3480	834	360
3200	143.8	3880	980	420
3500	143.8	4180	1016	420
4000	143.8	4680	1087	420

Dyn Load = 1.15 * Static Load

Buffer type	L1	D1
	(mm)	(mm)
A	53	63
B	68	80
C	85	100
D	105	125
E	150	100
F	190	125
G	100	100
K	80	80
M	125	125
A, B, C, D rubber		
E, F, G, K, M polyurethane		

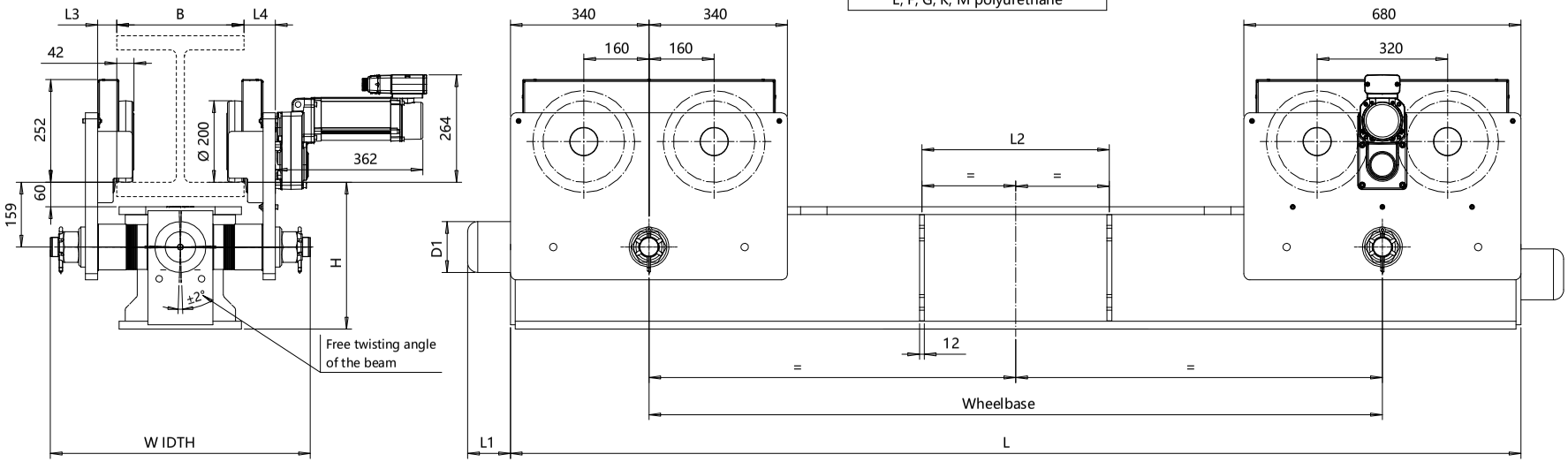

Location of stiffners	
Joint Plate Type	L2
	(mm)
No Joint Plate	460
SD3, BD3, BD4	460
SD4, BD5	560
SD5	660

Flange width range, B	L3	L4	WIDTH
(mm)	(mm)	(mm)	(mm)
127 - 210	46	76	534
211 - 314	46	76	638
315 - 418	46	76	742
No patented track option			

Pos	Description	Specification	Id	Drawing

ETTPIA Design | ETTPIA Chd | Appd

2012-04-11 Date

SLEQDOCV Dept

END TRUCK

OUTLINE DRAWING

RU20

RU20 END TRUCK

1 : 7

Folder UU20

Issue 8/2025