Double Girder - Medium, 4 PART DOUBLE

Hoist type:

SXR10 042..M

US-60Hz

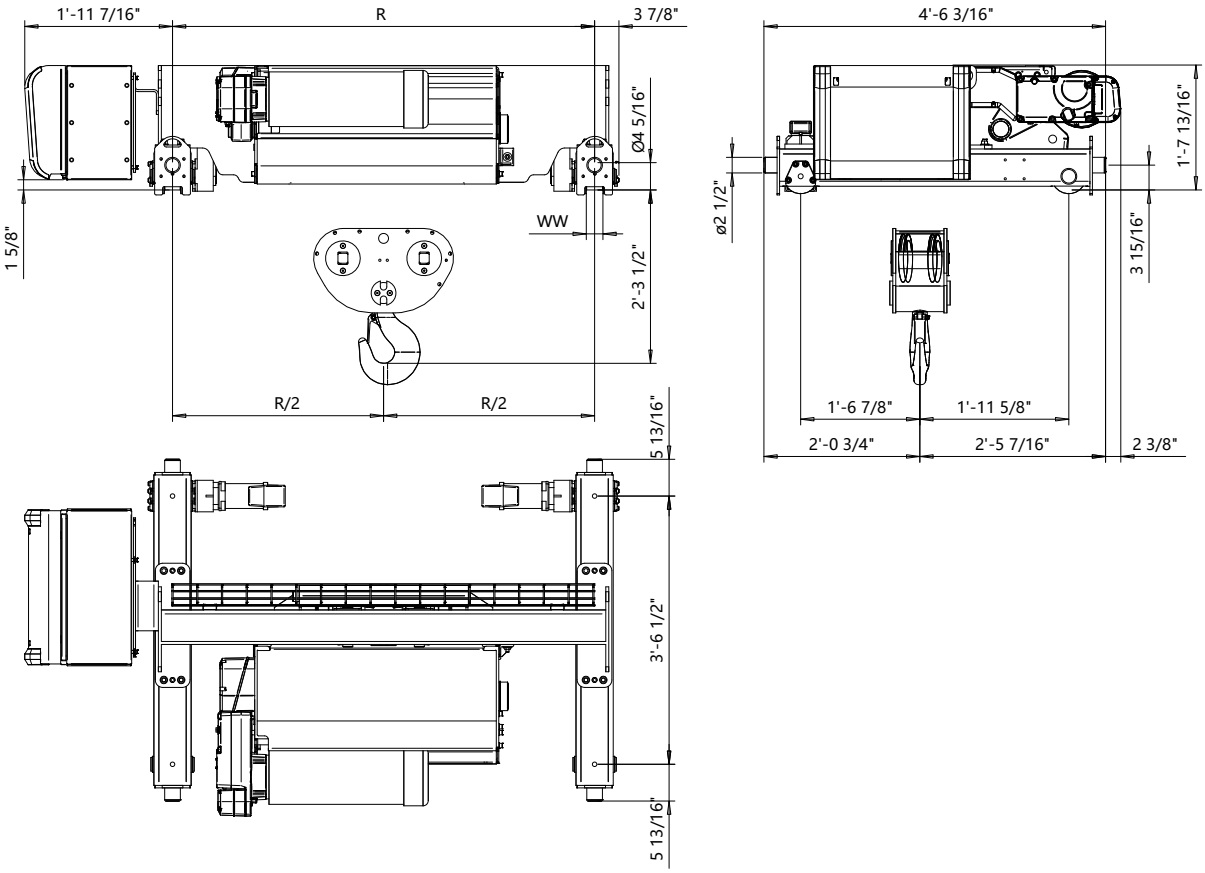

Headroom C-Dimension			Notes
Case 1	Case 2	Case 3	Case 1: Steel rope without HS22 limit switch
(inch)	(inch)	(inch)	Case 2: Steel rope with HS22 limit switch
27 1/2"	27 1/2"	27 1/2"	Case 3: Steel rope with HS22 L.S. & Rope angle sensor

						Estimated Weight *	
HOL	Length	WW min	WW max	R min	R max	R min	R max
(ft-in)	code					(lb)	(lb)
21'-3"	D	2 1/16"	3 1/4"	5'-6 15/16"	10'-2 1/16"	1870	2160
29'-6"	E	2 1/16"	3 1/4"	5'-6 15/16"	10'-2 1/16"	1940	2230
36'-1"	F	2 1/16"	3 1/4"	6'-6 3/4"	10'-2 1/16"	2070	2310
45'-11"	G	2 1/16"	3 1/4"	7'-10 1/2"	10'-2 1/16"	2230	2410
59'-0"	H	2 1/16"	3 1/4"	7'-10 1/2"	10'-2 1/16"	2350	2530
70'-6"	J	2 1/16"	3 1/4"	8'-10 5/16"	10'-2 1/16"	2510	2640
86'-11"	K	2 1/16"	3 1/4"	10'-2 1/16"	10'-2 1/16"	2810	2810

Load	Class
(ton)	ASME
6	H4+
7 1/2	H4+
10	H4

* Estimated weight with P5 hoist motor

Standard rail gauges are 5'-6 15/16", 6'-6 3/4", 7'-10 1/2", 8'-10 5/16", 10'-2 1/16".

Default trolley gauge is R min.

This document is the absolute property of R&M Materials Handling, Inc. This document must not be copied without the written permission of R&M Materials Handling, Inc.
The contents thereof must not be disclosed to a third party nor be used for any unauthorized purpose. Contravention will be prosecuted.

Design	Chd	Appd	Ref Drawing	R10-M-24
Date	DOUBLE GIRDER HOIST			1:10
SLEQMECE Owner Dept	4 PART DOUBLE			Folder
	R10042_M			Issue 1

R&M MATERIALS HANDLING