FOREWORD

This manual has been prepared to acquaint you with the general aspects of the installation, operation, and maintenance of the Robbins & Myers equipment you have purchased. It is our earnest desire to express our appreciation for the privilege of serving you.

We feel that the advantage of advanced engineering, based on more than 50 years' experience in designing hoists and cranes for all types of industrial service — plus superior workmanship and the highest quality materials available — will provide you the utmost satisfaction through the years.

Proper installation is important to the ultimate performance of this equipment. Careful study of the instructions will assure safe, dependable operation. It is also recommended that you keep this manual readily accessible in case of an emergency.

Standard Guarantee and Warranty

The Company will repair or replace, at its option, defects in material or workmanship developing within one year from date of shipment from the factory, providing the Company receives immediate written notice of such defects upon their discovery and such claims are substantiated by the Company's inspection department. Correction of such defects by repair or replacement, FOB the Company's factory, shall constitute fulfillment of this guarantee. The return of all parts submitted for inspection under this guarantee must be authorized by the Company and transportation prepaid by the shipper. The guarantee will not be applicable unless the apparatus has been properly cared for and operated under normal conditions. The Company will not be responsible for damage resulting from improper storage or handling prior to placing the apparatus in service. The Company has no liability for any repairs made outside the Company's factory unless with the prior written consent of the Company.

Guarantee on Purchased Items. The guarantee of the Company on purchased items, assemblies, or accessories which are installed as a separate unit shall not extend beyond the guarantee made by the manufacturer of the item, assembly, or accessory.

How to Order Repair Parts Correctly
The Parts Catalog section of this manual covers replacement parts required for your Robbins & Myers hoist and/or crane. To assure prompt service, each repair parts order must contain the following information:

1) Hoist and/or crane serial number (see cover).

2) Capacity.

3) Reference number from applicable bulletin.

4) Quantity.

5) Description.

6) Voltage, phase, cycles.

7) Correct shipping destination.

On the brass nameplate will be found the Serial Number of your hoist or crane — i.e., Serial No. H ---, J ---, or C ---, or as in the case of the most recently built units, it may show a five-digit number followed by two letters and another number. An example of this type serial number would be 37885PP1. Without this serial number we cannot be sure of sending you correct parts, so *always mention serial number for prompt service*.

Minimum Charges
All orders for repair parts are subject to a minimum charge.

Return of Parts
Robbins & Myers, Inc., will not accept return of any parts unless accompanied by a claim tag. These claim tags are issued at the time authorization of such return is made. Tags must be attached to the outside of the package.

Claims
All shipments are carefully inspected and are delivered to the carrier in good order. Upon receipt of shipment caution should be exercised that there is no loss or damage. If damage has occurred, refuse to accept the

shipment until the carrier makes the proper notation to that effect. In the event of concealed loss or damage, notify the carrier immediately. By following these suggestions you will encounter less difficulty collecting your claim.

Orders telephoned or telegraphed to us must immediately be confirmed by letter since we cannot assume responsibility for the correctness of the phone or telegraphed message.

Robbins & Myers spare parts are available locally in major industrial areas. Should it be necessary to order parts direct, they should be addressed as follows:

MATERIAL HANDLING DIVISION
CUSTOMER SERVICE DEPARTMENT
ROBBINS & MYERS, INC.
1345 LAGONDA AVENUE
SPRINGFIELD, OH 45501

IT IS IMPORTANT THAT THE PERSONS OPERATING OR SERVICING THE HOIST BE FAMILIAR WITH THE PRACTICES CONTAINED IN THIS MANUAL, FOR THEIR OWN PROTECTION AND FOR THE PROTECTION OF OTHER WORKMEN AND EQUIPMENT.

TABLE OF CONTENTS

Section *Page*

1. **Installation**
   - General 1-1
   - Mounting 1-1
   - Reeving 1-1
   - Lubrication 1-2
   - Power Connections 1-2

2. **Initial Start Up**
   - Proper Hook Motion 2-1
   - Proper Trolley Motion 2-1
   - Limit Switch Action 2-1
   - No-Load Operational Checks 2-2
   - Load/Run Test 2-2

3. **Safe Operating Practices**
   - Do's and Don'ts 3-1

4. **Operation Maintenance**
   - Typical Construction 4-1
   - Motors/Couplings 4-2
   - Hoist Motor Brake 4-2
   - Gearcase Assembly 4-2
   - Mechanical Load Brake 4-3
   - Frame and Drum 4-3
   - Wire Rope 4-3
   - Bottom Block/Sheaves 4-5
   - Controls/Enclosures 4-5
   - Limit Switch 4-6

5. **Preventative Maintenance**
   - Inspection/Preventative Maintenance Schedule 5-1
   - Troubleshooting 5-2
   - Lubrication Schedule 5-5

6. **Spare Parts Identification/Adjustment and Replacement Instructions**
   - Hoist Gear Case .....
   - Load Brake Adjustment .....
   - Bottom Block .....
   - Reeving .....
   - Trolley Components .....
   - Trolley Adjustment .....
   - Trolley Motor .....
   - Hoist Frame & Components .....
   - Hoist Controls .....
   - Hoist Motor Brake .....
   - Wiring Diagram .....
   - Misc. .....

SECTION 1
INSTALLATION

IMPORTANT

Hoists/trolleys are designed for lifting and transporting of materials only. Under no conditions, either during initial installation or in regular use, are hoists to be used for lifting or transporting of personnel.

General

Each complete Robbins & Myers hoist is load tested at the factory at 125% of rated capacity, and shipped assembled. Units purchased and shipped without motors and/or bottom blocks are bench run only and require load testing at the job site by the user after installation.

All hoists/trolleys are designed for the type of mounting specified by the purchaser. The adequacy of the supporting members (monorail beams, hangers, supports, framing, etc.) is the responsibility of the user.

Prior to installation, unit should be checked over for damage during shipment or handling at the job site. Particular attention should be taken to make sure that the hoisting cable and limit switch mechanism has not been damaged by improper use of fork lifts or sling chains.

Read the instructions contained in this manual and observe the warning tags attached before installation is started.

Mounting

Before installing trolley mounted hoists, make certain that the trolley wheel contour is correct for the type of monorail beam the trolley is to run on. WF beams and patented monorail tracks should have flat flanged wheels, while standard I-beams should have contoured tapered tread.

On rolled I-beams or WF sections wheel clearance must be such that there is approximately ⅛" clearance between wheel flange and rail with hoist/trolley centered on the beam. See Figure 1-1.

Trolleys designed to run on patented type rails should have 1/16" clearance. See Figure 1-2. Type MSM trolleys (J and F series hoists) are preset at the factory and are non-adjustable. Type "M" trolleys with flat tread wheels (straight track only) are adjustable and should be checked for proper clearance.

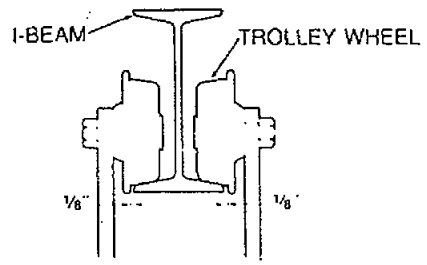

Figure 1-1

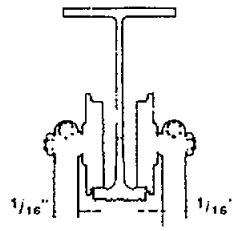

Figure 1-2

See Section 6 on Trolley Spare Parts Identification Sheet for wheel adjustment instructions.

After trolley hoists have been hung on the beam, check for balance. All Robbins & Myers' hoists are balanced at the factory for the "as shipped" condition. Any auxiliary devices (control boxes, cable reels, etc.) furnished and mounted by customer may require the addition of counter-weight. Hoists must hang straight without a load or there will be a noticeable kick when a load is applied to the hook.

Reeving

Bottom block must hang straight, and cables must be free of kinks or twists. Make sure limit switch weight is not hung up, and hangs freely suspended from its supporting cable/chain. Bottom block may rotate during

initial lifts due to new cables not having taken a permanent "set", causing the cable falls to twist, or wrap around each other. See Section 4 Operation Maintenance, Wire Rope for corrective action.

See Section 6 on Bottom Block Spare Parts Identification Sheet for proper reeving.

Lubrication

All Robbins & Myers' hoists are shipped completely lubricated, including gear cases filled with oil; however, to avoid potential damage from low oil levels resulting from leakage during handling/shipping, all levels must be checked, and oil added where necessary.

If hoist gearcase has been shipped with solid oil filler plug, replace with attached breather plug to prevent oil leakage due to pressure build up.

Make sure cables and any open gearing are adequately greased and free from any contamination or dirt.

Refer to Section 5 Lubrication Schedule for type of lubrication.

Power Connections

Make sure that power supply voltage is the same as that shown on the hoist nameplate. The power source/conductors must be sized sufficiently to maintain the voltage at the hoist at ± 10% of the nominal voltage under all operating conditions. Standard nominal voltages are 230/460/575. Improper voltage maintenance can cause motor overheating or sluggishness, and chattering or inoperative motor brakes and controls.

A wiring diagram is included in this manual showing the identification of the power lead connections.

CAUTION

Make sure power source disconnect is off and locked in open position while making connections.

Make sure all collectors, if furnished, are compatible and properly lined up and make good contact with conductor bars on rail.

Note: All standard Robbins & Myers hoists are furnished with motor and control circuit protection which in their interpretation meet the requirements of the National Electrical Code, 1978. The protective devices required for the power feed are outlined in Article 610 of the NEC, and are the responsibility of the user. It is recommended that this article be reviewed by the user for compliance requirements.

SECTION 2
INITIAL START-UP

Once power has been supplied to the hoist, several important checks *must* be made.

Proper Hook Motion (Hoist Motor Rotation)
Since direction of rotation of any three-phase A.C. motor can be reversed by reversing any two of the three lines feeding the motor, it is important that the motion travel is in correct relationship with the button being depressed.

CAUTION

Do *not* attempt to reverse hoist motion by changing control leads in the push button or at the contactor, or change the nameplate on the P/B. The pilot circuit limit switch is in series with the "up" control circuit wiring as furnished from the factory. Changing these leads will not only void the stop limit, but will also cause the down/reverse circuit of the limit to power the bottom block in the hoisting direction.

To check/correct hook motion (motor rotation), *carefully* inch the up button and observe hook motion. If block does *not* travel up, stop and open the power source disconnect.

IMPORTANT

Do not run bottom block into limit switch with down button if direction is reversed. To correct the direction of the hook block, reverse any two leads supplying power to the hoist. This can be done at the main power source, or at the lead in connections to the hoist.

Proper Trolley Motion
If necessary to change trolley motion to orient direction with P/B markings, change any two power leads at the load side of the contactor only.

CAUTION

Do not reverse main power leads. This will cause a reversal also of hoist motion, with resulting hazards at limit switch as described under "CAUTION — Proper Hook Motion."

The optional ballast resistors may be adjusted to provide optimum starting acceleration for normal load conditions as described in Section 6 on the Trolley Motor Sheet.

The optional trolley brake may be adjusted to provide the optimum stopping deceleration for normal load conditions as described in Section 6 on the Trolley Brake Spare Parts Identification Sheet.

Limit Switch Action
After proper direction has been established, run bottom block down several feet from upper limit and stop. Check upper limit action by slowly lifting weight or paddle manually while operating hoist in the hoisting direction. Block should stop after lifting weight no more than two inches. If block does not stop, immediately release the up button, shut off power to the hoist and check out control circuit wiring, switches, or possible binding of limit switch levers/shafts.

Next, check reverse element of limit switch action. Slowly lift the limit weight manually beyond the stop position with bottom block stationary and lowered several feet below limit. Lifting limit weight beyond stop position should automatically cause bottom block to lower. If block fails to lower, check out circuit as above.

IMPORTANT

On some model hoists, additional lifting of limit weight will cause lowering motion to stop.

CAUTION

Under no conditions should any lifting of limit weight cause the hook block to raise. If this happens, hoist motor is not properly phased. Do not proceed further with installation until proper motor rotation is established. See previous instructions — "Proper Hook Motion." Contact your factory service representative for additional information if necessary.

Note: If hoist is furnished with optional upper and lower screw limits, or lower paddle limit, check for proper

setting. Unless otherwise specified, upper screw limits are set at the factory to trip approximately 3" below contact of bottom block with the upper weight type limit. Lower limits are set to trip with two wraps of cable remaining on drum. For adjustment of trip location, refer to separate sheets in Section 6.

No Load Operational Checks.
Check motor brake adjustment. Block should stop without load on hook with maximum 1" to 3" of hook drift, depending on hoisting speed. See Section 6, Spare Parts Identification Sheet "Brakes" for adjustment instructions.

Run bottom block to within 6" of upper limit switch, then slowly inch button until block makes contact with limit weight and block motion is stopped.

Next, lower block out of limit 1 to 1½ feet and stop. Run bottom block into upper limit at maximum hoist speed. Block motion should be stopped by limit switch action.

Note: At most fast hoisting speeds, generally 30-40 FPM or faster, bottom block may be plugged down by reverse action of limit switch.

Lower bottom block to the lowest required position. There must be at least two wraps of cable remaining on drum.

CAUTION

No hoist should be installed where the potential of winding the cable backwards on the drum can be foreseen. All Robbins & Myers F and C series hoists are available with an optional lower limit which should be specified where the inherent dangers of cable breakage exist if cable is wound on backwards.

Load/Run Test
While all Robbins & Myers hoists are load tested at the factory, full load testing should be performed after installation by the user.

Attach a near-capacity load and lift/lower several feet. The mechanical load brake, when operating correctly, will maintain proper lowering speed when lowering button is depressed. If motor brake or controls chatter under full load, check voltage at motor.

Run trolley full length of monorail and check for binding of trolley wheels on rail and/or interference at splice joints, hanger connections/bolts, etc. Check contact with rail end stops. Contact should be made with trolley side plates or bumpers. Rail stops designed to make contact with wheels are to be avoided.

Note: Trolley wheels may be adjusted to provide $^{1}/_{16}$" maximum additional clearance between wheel and beam flanges if binding occurs while negotiating curves in tracks.

SECTION 3
SAFE OPERATING PRACTICES

General
There is no one single factor that is more important for minimizing the possibility of personal injury to the operator and those working in the area, or damage to property, equipment, or material, than being familiar with the equipment and using *Safe Operating Practices*.

Hoists/trolleys are designed for lifting and transporting of material only. Under no circumstances, either during initial installation or in regular use, are hoists to be used for lifting or transporting of personnel.

No operator should be permitted to use the equipment who is not familiar with its operation, is not physically or mentally fit, or has not been schooled in safe operating practices. The misuse of hoists can lead to certain hazards which cannot be protected against by mechanical means; hazards which can only be avoided by the exercise of intelligence, care, and common sense.

Safe Operating Practices also involves a program of periodic inspection and preventative maintenance (covered in separate section). Part of the operator's training should be an awareness of potential malfunctions/hazards requiring adjustments or repairs, and bringing these to the attention of supervision for corrective action.

Supervision and management also have an important roll to play in any safety program by assuring that a maintenance schedule is adhered to, and that the equipment provided for the operators is suitable for the job intended without violation of one or more of the rules covering safe operating practices and good common sense.

The Safe Operating Practices shown are taken in part from the following publications:

American National Standards Institute (ANSI)
Safety Standards for Cranes, Derricks, Hoists
ANSI B30.2 — Overhead and Gantry Cranes
ANSI B30.16 — Overhead Hoist

Do's and Don'ts (Safe Operation of Hoists)
The following are Do's and Don'ts for safe operation of overhead hoists. Taking precedence over any specific rule listed here, however, is the most important rule of all, USE COMMON SENSE. A few minutes spent reading these rules can make an operator aware of dangerous practices to avoid and precautions to take for his own safety and the safety of others. Frequent examinations and periodic inspections of the equipment as well as a conscientious observance of safety rules may save lives as well as time and money.

DON'TS — HOISTS

1. Never lift or transport a load until all personnel are clear.
2. DO NOT allow any unqualified personnel to operate hoist.
3. NEVER pick up a load beyond the capacity appearing on the hoist. Overloading can be caused by jerking as well as by static overload.
4. NEVER carry personnel on the hook or the load
5. DO NOT operate hoist if you are not physically fit.
6. DO NOT operate hoist to extreme limits of chain or rope.
7. AVOID sharp contact between two hoists, between hoist and end post, and hooks and hoist body
8. DO NOT tamper with any parts of the hoist.
9. NEVER use the hoist rope or chain as a sling.
10. DO NOT divert attention from load while operating hoist.
11. NEVER leave a suspended load unattended

12. DO NOT use chain or rope as ground for welding. NEVER touch a live welding electrode to the chain or rope.

13. DO NOT jog controls unnecessarily. Hoist motors are generally high torque, high slip types. Each start causes an inrush of current greater than the running current and leads to over-heating and heat failure, or burn-out, if continued to excess.

DO'S — HOISTS

1. READ and follow manufacturer's instruction, installation, and maintenance manuals. When repairing or maintaining a hoist, use only manufacturer's recommended parts and materials.

2. READ and follow all instruction and warning information on or attached to a hoist.

3. REMOVE the hoist from service and thoroughly inspect and repair as necessary if unusual performance or visual defects (such as peculiar noise, jerky operations, or travel in improper direction or obviously damaged parts) are noticed.

4. ESTABLISH a regular schedule of inspection and maintain records for all hoists with special attention given to hooks, ropes, chains, brakes, and limit switches.

5. CHECK operation of brakes for excessive drift.

6. CHECK operation of limit switches.

7. CHECK for damaged hooks, ropes, or chain.

8. KEEP load chain or rope clean and well lubricated.

9. CHECK the wire rope or chain for improper seating, twisting, kinking, wear, or other defects before operating the hoists.

10. CHECK for broken wires in wire rope. Twelve randomly distributed broken wires in one rope lay or four broken wires in one strand in one rope lay are sufficient cause for replacement.

11. MAKE SURE a load clears neighboring stock piles, machinery, or other obstructions when raising, lowering, or traveling the load.

12. CENTER hoist over the load before operating.

13. AVOID swinging of load or load hook when traveling the hoist.

14. BE SURE the load attachment is properly seated in the saddle of the hook. Balance load properly before handling. Avoid tip loading.

15. PULL in a straight line, so that neither hoist body nor load chain or rope are angled around an object.

16. MAKE SURE you take up slack slowly.

17. KNOW the hand signals for hoisting, cross travel, and crane travel if working with cab operated hoists or cranes. Operators should accept the signals of only those persons authorized to give them.

SECTION 4
OPERATION/MAINTENANCE

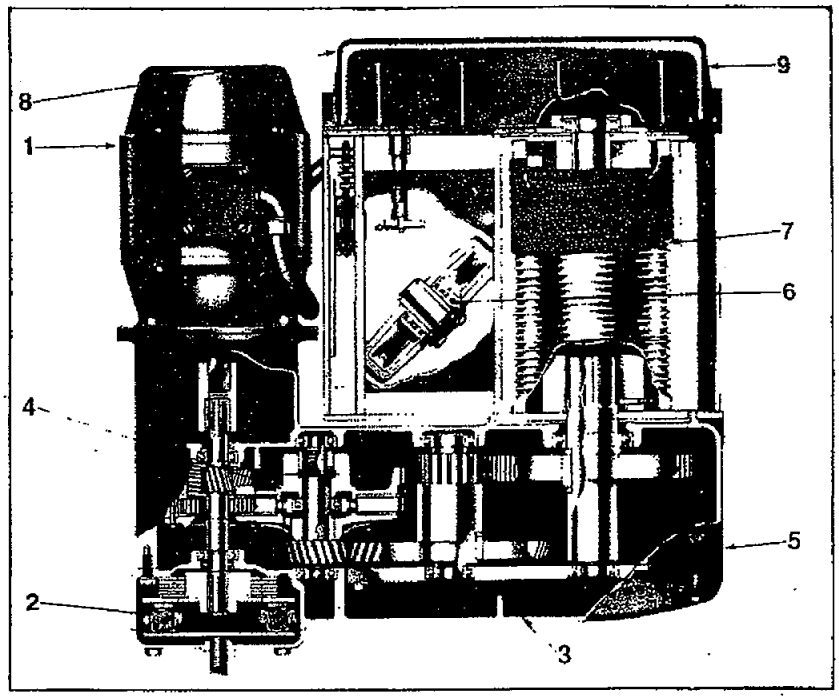

Figure 4-1

Typical Construction

Figure 4-1 represents a typical hoist cross section. While each model may have some slight variation in design/arrangement, all models have the same basic elements.

1. *Motor/Coupling* — basic drive package.

2. *Hoist Motor Brake* — brings motor to quick stop, and part of the braking system that enables a load to be suspended from the hook with power off.

3. *Gearcase Assembly* — three reduction gear reducer coupling the motor to the drum. Also houses the mechanical load brake.

4. *Mechanical Load Brake* — Weston-type friction brake which controls the lowering speed, and, in conjunction with motor brake, provides a double braking system for holding suspended loads.

   Note: If optional electric braking systems are provided, mechanical brake may not be included.

5. *Frame/Drum* — basic structural components which support the load to be handled.

6. *Bottom Block and Sheaves* — includes bottom block and equalizer sheaves.

7. *Wire Rope* — hoisting rope and end connections for picking up the load.

8. *Controls/Enclosures* — electromechanical devices for supplying power to, and reversing direction of, the motor(s).

9. *Limit Switch* — emergency shut-off switch to stop hook motion at maximum elevation of bottom block.

CAUTION

Do not perform any service operation when load is suspended from hook.

The following details the operation/maintenance instructions for each basic element.

Motors/Couplings
Robbins & Myers hoist motors are designed to provide the utmost in dependable hoisting service. Standard motors are enclosed for protection against normal hazards of dust and moisture. All bearings are sealed and lifetime lubricated and do not require greasing.

Standard motors are furnished with thermal protection in the form of normally closed, automatic reset control circuit thermostats. These are pilot circuit devices which open the control circuit if the motor overheats. The hoist motor protector opens only the "up" circuit.

Couplings may be either sleeve type (head mounted motors) or flexible (foot mounted motor). Couplings are press fit and keyed to motor shaft, with slip fit onto spline of gearcase shaft. Splined half of couplings are coated with grease at the factory and must be regreased if coupling or gearcase extension shaft are disassembled.

Note: Foot-mounted motors are shimmed between motor feet and motor shelf to provide the necessary accuracy of alignment between motor and gearcase shafts. If motor is removed and reassembled to hoist, the shimming must be retained. If new motor is installed, reshimming may be necessary. Maximum allowable misalignment of shafts using flexible coupling is 1° on angular alignment and 0.020" on parallel. See Figure 4-2.

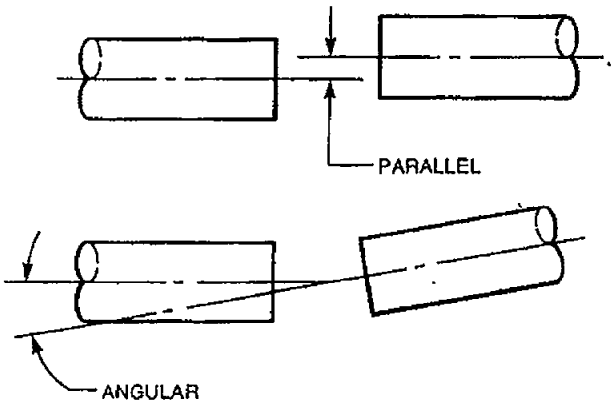

Figure 4-2

Hoist Motor Brake
Standard Robbins & Myers' hoists are furnished with electro-magnetic disc type brakes with minimum torque rating equal to 100% full load torque of the motor. The purpose of the motor brake is twofold:

1) To minimize hook drift by bringing the motor to a quick and smooth stop.

2) To help hold loads suspended from the hook with power off.

When the hoist motor is energized, the magnet brake coils are also energized, pulling the armature plate against the brake pole plate, thereby releasing the pressure on the friction discs, this permits the discs to turn freely with motor rotation. When the motor is de-energized, the brake coils are simultaneously de-energized, releasing the armature plate which applies pressure to the friction discs and motor is brought to a stop. The kinetic energy of the motor is dissipated as heat on the friction surfaces.

Proper maintenance and adjustment of the motor brake is essential to the reliable operation of the hoist. Heat is generated and wear occurs each time the motor is stopped and the work done by the brake is not reduced with light load or empty hook operation. The brake life and serviceability will be greatly extended by adequate maintenance. The practice of excessive and unecessary inching of pushbutton by an operator causes unnecessary brake heating and wear. The frequency of brake wear adjustment depends on the duty cycle. To adjust brake, follow instruction on nameplate secured to brake cover.

The brake adjustment is for taking up disc wear and not for torque adjustment. Brake discs must be replaced when wear reaches ⅛" total per disc ($^1/_{16}$" per side).

Gearcase Assembly
Drive train consists of three reductions of precision cut gears/pinions, keyed or splined to steel shafts, supported on ball bearings. First two reductions are helical gears, last reduction spur gears. All gears and bearings operate in an oil bath and do not require additional lubrication.

Gearcases normally require a minimum of maintenance. On some models, the motor brake is built into the gearcase cover. On these models, the brake parts must be removed and the brake coils disconnected prior to removing the cover. Care should be used to prevent damaging the oil seal around the brake shaft when the cover is removed and replaced.

It is recommended that both the oil seal and gearcase cover gasket be replaced whenever inspection or servicing of the gearcase requires cover removal.

CAUTION

Fill gearcase to oil level with lubrication as recommended in lubrication schedule prior to putting hoist back in service.

Mechanical Load Brake

Robbins & Myers' hoists, except those equipped with an optional electric braking system, are furnished with a Weston-type mechanical load brake inside the hoist gearcase, which serves three purposes:

1) To suspend the load without power to the hoist and independent of the motor brake.

2) Controls the lowering speed by dissipating the energy from the overhauling load off the drum as heat in the sliding friction surfaces.

3) Reduces motor heating and motor brake wear by absorbing the potential and kinetic energy of a lowering load rather than dissipating this energy in these elements.

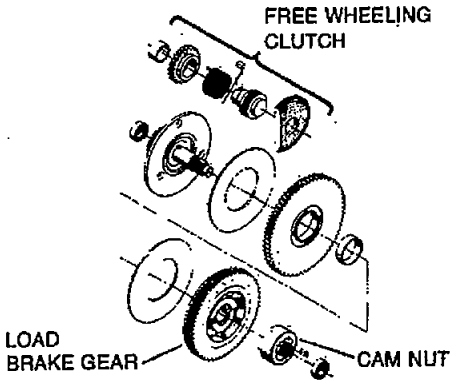

Figure 4-3

Operation of Load Brake

In the hoisting direction, the load brake gear, which is free to turn on the load brake shaft, rotates with respect to the cam nut. See Figure 4-3. The thrust generated from the matching include surfaces on the cam nut and load brake gear compresses and locks the load brake. The freewheeling clutch assembly is free to rotate in the hoisting direction, and the load brake rotates as a unit and simply becomes part of the gear train.

In the down direction, the free-wheeling clutch is locked, preventing rotation of the ratchet gear. Motor rotation causes load brake gear to back off the include surface of the cam nut. Pressure on friction discs is relieved allowing the overhauling load off drum to rotate the load brake against the friction surfaces, dissipating energy in the form of heat.

Load brake adjustment instructions are shown in Section 6 on the Gearcase Parts Identification Sheet.

Frame and Drum

The frame and drum are both constructed of steel, and unless damaged from abuse (impact with another hoist or building structure) require no maintenance. A frame or drum that is no longer serviceable for any reason should be referred to the factory for replacement/repair.

Wire Rope

CAUTION

A hoist should never be used if the wire rope shows any evidence of mechanical damage or excessive wear.

Replacement must be made using cable of exact size and quality with which your hoist was originally equipped from the factory.

Improper wire rope storage or installation procedure can render the cable unusable prior to the first lift.

Wire rope inspection should be conducted by a designated person using good judgment in evaluating the remaining service life. Any deterioration of the cable resulting in appreciable loss of the original strength such as situations described below should be noted and evaluated.

1) Improper lubrication of cable.
2) Worn outside wires.
3) Broken or corroded wires at the end connections.
4) Crushing, slicing, unstranding, or kinking.
5) Internal wear caused by grit penetrating the strands.
6) Broken outside wires and the concentration of such wires.
7) Reduction of original rope diameter.
8) Damaged, worn, or improperly applied end connections.

Note: Also evaluate these sections which are normally hidden during inspections, such as sections which pass over equalizer sheaves.

CAUTION

Wear gloves whenever handling wire rope.

The wear life of the wire rope depends mainly upon the frequency and severity of service and its maintenance. All wire rope will eventually deteriorate to a point where it is no longer serviceable.

The precise rules can be given for determination of the exact time for replacement of wire rope because of the many factors involved. The following conditions should be sufficient reason for consideration of replacement.

1) Twelve randomly distributed broken wires in any one rope lay, or four broken wires in any one strand in one rope lay.
2) Wear of one-third of the original diameter of individual outside wires.
3) Kinking, crushing, birdcaging, or any damage resulting in distortion of the rope structure.
4) Evidence of any heat damage from any cause.
5) Reductions from nominal diameter of more than:
   a) $^1/_{16}$" for diameters up to and including $^5/_{16}$".
   b) $^1/_{32}$" for diameters ⅜" to ½" inclusive.
   c) $^3/_{64}$" for diameters $^9/_{16}$" to ¾" inclusive.

The correct diameter of a wire rope is the diameter of a circumscribed circle which will enclose all the strands. It is the largest cross-sectional measurement as illustrated in Figure 4-4. The measurement should be made carefully with calipers. The illustrations show the correct and incorrect methods of measuring the diameter of wire rope.

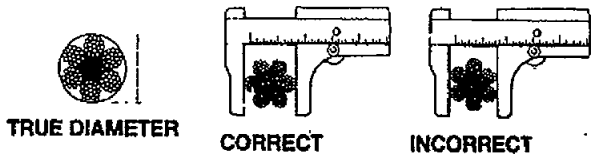

Figure 4-4

Generalized instructions for inspection/servicing of wire rope follow. Specific reeving instructions are shown in Section 6 on the Bottom Block Spare Parts Identification Sheet.

1) Hoisting ropes are of special construction, designed specifically for hoist applications. It is recommended that replacement cables with sockets swaged on the end when required be obtained from an authorized Robbins & Myers service station or the factory. Use of non-authorized cable may seriously shorten the life of the cable.

2) When unreeling a new replacement cable, follow procedure sketched below to avoid developing kinks or twists.

3) Maintain rope in a well-lubricated condition. See lubrication chart.

4) Rope clips, when used, must be assembled with the rope saddle on the load side of the cable. See sketch below.

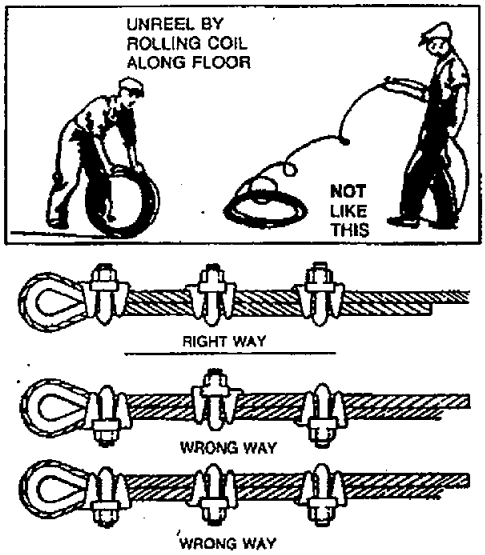

5) Make sure replacement cables are properly reeved through sheaves and bottom block. See reeving diagram.

6) Any new or replacement cable when first installed may cause the bottom block to turn or twist when a load is applied, resulting in the hoist cables twisting around each other. To correct, run bottom block to the floor and disconnect the cable at the end anchor on the hoist frame. Turn the end of the cable several revolutions in the direction opposite of block twist and reconnect. Run empty bottom block up and down a few times to stabilize cable twist. It may be necessary to repeat more than once during the first few days of hoist operation with new cables.

Bottom Block/Sheaves

Sheaves showing evidence of scored grooves or broken/cracked flanges or sharp edges generated from wear, should be replaced. Worn sheaves can greatly reduce the life of the hoisting rope. Check hooks for deformation or cracks. Hooks having a throat opening more than 15% of normal, or more than a 10 degree twist from the plane of the unbent hook, must be replaced. See Figure 4-5.

Due to the many types and sizes of hooks which can be furnished and specified by the user, it is recommended that the user measure the actual throat opening of the hook as furnished and record on the sketch below and retain for a permanent record. This record can then be used for determining when hook must be replaced due to deformation/excessive throat opening.

Note: Any hook that is twisted or has throat opening in excess of normal indicates abuse or overloading of the unit. Other load bearing components should be checked for damage.

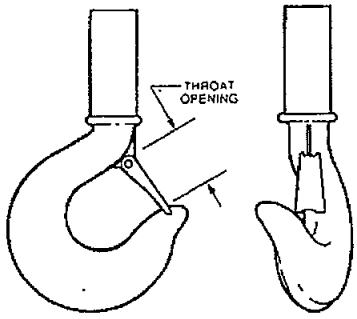

Figure 4-5

Safety latches, when furnished, should be replaced if bent or broken to the extent that they no longer provide proper closure of throat opening of hook.

CAUTION

Repairs by welding or reshaping of hooks are to be avoided.

Controls/Enclosure

WARNING

Before removing or checking any electrical component, be sure the power supply is shut off, and disconnect locked in the open position.

Standard basic control components consist of the following:

1) Motor Contactor — three pole reversing contactor which closes the power leads to the motor when actuated by the push button.

2) Push Button Station

3) Control Circuit Transformer — reduces the incoming power supply voltage to 115 volts for control circuit operation

4) Limit Switch (see separate section)

5) Motor Thermal Protection — pilot circuit contact which opens the hoisting circuit if motor overheats.

Note: The number, size, and quantity of control devices vary considerably, depending on the number and types of motors and the many control options that are available. Refer to wiring diagram for specific details on power/control devices.

No specific rules can be given as to the frequency of replacement of electrical devices. Deterioration of electrical components is directly related to the heat generated (on time) in contactor coils and transformers, and the arcing of contactors when motor circuit is opened (starts/stops). Electrical malfunctions can be minimized by a monthly to quarterly inspection for loose connections/broken or frayed wiring, and replacement of contacts on starters/relays when severly pitted.

Limit Switch

Standard upper weight type limit switch consists of a weight or paddle suspended from a chain or cable, which, when lifted by upward motion of the bottom block, opens the hoist control circuit and stops further block travel. A second position, should bottom block coast upwards due to improperly adjusted motor brake, closes the lowering circuit and results in bottom block being driven downward by the motor. Downward motion stops after 2"-3" of block travel.

CAUTION

Standard upper weight limit is an emergency device only and is not to be used as an automatic stop. Hoist motor must also be properly phased for limit to function as intended. See warnings/instructions under "Installation — Initial Start Up."

Since good hoisting practice dictates the use of the upper limit as an emergency device only, and in many installations is seldom used, limit switch parts do not normally need replacement due to wear. Maintenance consists of making sure that the limit remains functional and does not become inoperative due to dirt, dust, corrosion, or physical damage.

IMPORTANT

When checking manually, make sure bottom block is lowered several feet below upper limit.

ROBBINS MYERS

SECTION 5
PREVENTATIVE MAINTENANCE

Inspection/Preventative Maintenance Schedule

The intervals between inspections will vary due to the wide range of applications, duty cycles, and environmental conditions encountered by hoisting equipment. The following schedule lists minimum requirements, based on intermittent operation of the hoist on an 8-hour/day, 5-day/week work schedule, under normal environmental conditions (free from excessive dust, moisture, and corrosive fumes). If duty is heavier, or the environment severe, inspections should be more frequent.

The operator should also bring to the attention of maintenance personnel any unusual operation conditions that occur between inspection periods, and not operate hoist until unit has been repaired and is functioning properly.

INSPECTION/PREVENTATIVE MAINTENANCE SCHEDULE

Time Interval	Inspection Function
Start of each shift	*Upper limit switch* — check by operating empty hook into limit. *Hoist/trolley brakes* — excessive coast without load. *Reeving* — twisted or kinked cables. *Controls* — proper operation from pushbutton.
Weekly	*Reeving* — check for kinks, unstranding, broken wires, corrosion, etc. *Bottom Block* — check for bent or twisted hook and/or safety latches. For complete instructions on cable/bottom block, refer to Operation/Maintenance section under Reeving System.
Monthly to Quarterly	*Motor Brakes* — remove, inspect, clean magnetic disc plate and linings. Replace as required. Adjust brake to proper setting. See Operation/Maintenance section — Hoist Motor Brakes. *Lubrication* — refer to Lubrication Sheet. Regrease lubrication points and check oil level in gearcases. *Controls* — inspect contacts of motor starters. *Note:* discoloration and slight pitting are normal. Replace only if silver is worn thin or is severely pitted. Check for loose or broken connections. *Limit Switch* — remove any accumulated dirt/dust on exposed shafts/levers. Lift the limit weight manually through the down/reverse position to make sure that shaft/bearings rotate freely. (**IMPORTANT:** When checking manually, make sure bottom block is lowered several feet below upper limit.)

Time Interval	Inspection Function
Semi Annually to Annual	Drain and replace oil in hoist gearcase. Check for loose bolts and/or connections on both hoist/trolley and suspension system. Check all load carrying parts, such as sheaves, drums, bottom blocks, wheel pins, frames, suspension bolts for wear, cracks, distortion or signs of overload. Replace/tighten secure as required. Lubricate all flexible couplings. Check mechanical load brake for holding action. See Operation/Maintenance Section under Load Brake. If noise level of hoist gearcase has increased, remove cover and inspect for damaged/worn gears, bearings, and shafts.

IMPORTANT

After any major tear down, repair, or alteration, unit should be functionally load tested as described in section "Installation — Initial Start Up." Also, any hoist which has been out of service one month or more should have a complete maintenance/inspection, followed by a functional load test.

TROUBLESHOOTING

While the chart below can be used for diagnosing typical equipmental functions, the basic underlying cause in many cases is insufficient voltage maintenance at motor and control terminals. Not only must the equipment be connected to the proper nominal voltage source, the power supply leads must be of sufficient size to maintain rated voltage during starting and full load operation. Excessive voltage drop during starting or under load can cause:

1) Sluggish starting and overheating of motors.
2) Chattering and overheating of contactor and brake coils.
3) Overheating and possible burn out of transformers.
4) Non-release of motor brakes.
5) Excessive arcing of electrical contacts.
6) Erratic performance of optional electronic O.L. devices.

PROBLEM	DIAGNOSIS	POTENTIAL SOLUTION
Hook moves in wrong direction	Phase reversal of three-phase power supply.	Interchange any two of the three power lead connections either at the power source or at the lead in connections to the hoist. (See Caution — Initial Start Up.)
	Hoist cable wound on wrong side of drum.	Rewind and check hoist cable for damage. Check operation of lower limit switch. **CAUTION** Hoist operation must immediately cease and corrective action taken before hoist is put back in service.
Hook doesn't stop at extreme of up travel.	Limit Switch(es) are not opening circuit.	Check operation and setting of limit switch(es). **CAUTION** Hoist operation must immediately cease and corrective action taken before hoist is put back in service.

PROBLEM	DIAGNOSIS	POTENTIAL SOLUTION
Hook doesn't raise or lower	No power	Check switches, breakers, fuses, and power line connections for open circuit, grounded or faulty connections.
	Contactor not operating.	Check connections in control circuit. Check contactor coils and pushbutton control cable for open or short circuit. Reset overload relay if used. Defective transformer.
	Limit switch open circuit.	Check limit switch contacts.
	Magnetic brake not releasing.	Check adjustment. Check for loose connections. Check auxiliary contacts and brake coil.
	Excessive load.	Check weight of load and rated capacity.
Hook up motion stops after heavy use.	Thermal detectors sense overheated motor.	Avoid concentrating many lifts in short time period.
Motor overheats.	Excessive load.	Check weight of load. Do not exceed hoist capacity.
	Excessive duty cycle.	Avoid concentrating many lifts in short time period.
	Incorrect voltage or frequency.	Check for correct power supply. Voltage should be within ±10% of nameplate rating.
	Three-phase power supply phase failure or unbalanced current.	Check motor windings for open or short circuits. Check supply lines for balanced voltages.
	Brake does not release completely.	Check brake adjustment. Check brake control circuit and brake coil.
Hoist lifts lighter loads but not heavy loads.	Hoist overloaded.	Reduce load.
	Optional overload device set too low.	Adjust overload device. **CAUTION** Do not set overload device above rated load.
Bottom block fails to stop quickly.	Magnetic brake slips.	Check brake adjustment. Check brake linings, clean, or replace as necessary. Check load brake operation, refer to Section 4 Operation/Maintenance.
Load lowers when hoist not being operated.	Both the magnetic brake and the load brake are inoperative.	Refer to Section 4 Operation/Maintenance.

PROBLEM	DIAGNOSIS	POTENTIAL SOLUTION
Hoist operates intermittently.	Collectors making poor contact.	Check collectors for free movement of spring loaded arm, weak spring, connections, and free movement of shoe or roller.
	Defective pushbutton.	Check pushbutton inserts.
Excessive cable wear.	Lack of lubrication.	Lubricate cable.
	Hoist being used for side pulling.	Hoist cable should be vertical before starting lift so that cable wraps smoothly on drum.
Magnetic brake does not release.	Low voltage.	Check voltage.
	Magnetic coil is open or shorted. Open brake circuit.	Check connection. Check magnetic coil for open or short circuit.
Oil leaks	Vent plug clogged.	Check to be sure vent plug is open.
	Oil seals worn or damaged. Gasket leaking between gearcase and cover.	Replace oil seals. Tighten any loose bolts. Replace gasket if necessary.

D11 20 TONS (Bm)

R&M MATERIALS HANDLING, INC.
SPACEMASTER
HOIST & CRANE PRODUCTS

LUBRICATION SCHEDULE

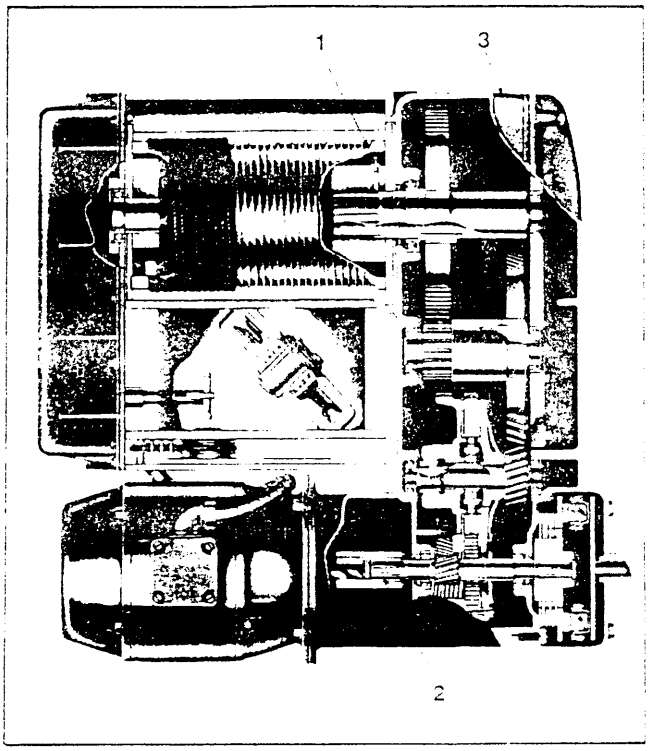

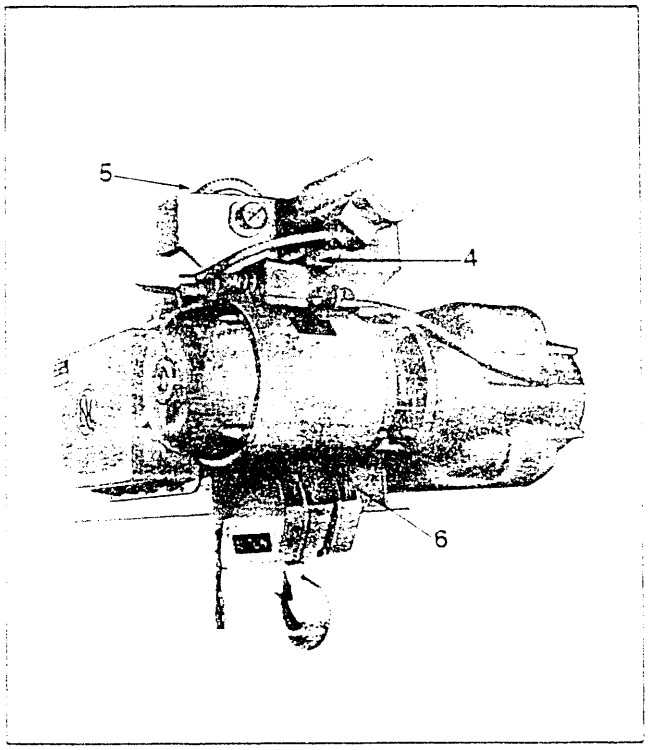

LOCATION	INTERVAL	TYPE LUBRICANT
1. Drum drive spline	Monthly to quarterly	Mobilux EP No. 1 or equal.
2. Motor drive spline	During any overhaul or disassembly of motor	Mobilux EP No. 1 or equal.
3. Hoist gearcase (capacity 5.6 quarts) * 4. Trolley gearcase	Check level monthly to quarterly. Drain and refill semi-annually to annually.	Multi-purpose lubricating oil 20 wt. or 30, non-detergent. Sohio factovis No. 52 (20 wt.), or No. 65 (30 wt.); Shell Turbo No. 33 (20 wt.), or No. 41 (30 wt.); Gulf Harmony No. 53 (20 wt.), or No. 61 (30 wt.); Mobil DTE Hvy. Medium, 20 wt.
** 5. Open wheel gearing	Monthly to quarterly	Dubois outside gear lube of equal.
6. Hoisting cable	Monthly to quarterly	600 W. grease.

Drum stud, rope sheave, and monorail trolley wheel bearings are lifetime lubricated and sealed and normally need no further attention. If disassembled, however, a light coat of grease on shafts and housings is recommended to prevent bearings freezing in place.

* Type M only -- for type T refer to separate enclosed bulletin for data.

** Type M only -- no open gearing on type T.

SECTION 6
SPARE PARTS IDENTIFICATION/ADJUSTMENT AND REPLACEMENT INSTRUCTIONS

General

The pages in this section all refer to the specific Robbins & Myers hoist whose serial number matches that on the front page of this book.

Also included are specific operation and adjustment instructions applying to components and assemblies in the hoist.

IMPORTANT

Both the reference number and the hoist serial number must be provided to ensure the proper ordering of parts.

"REFERENCE ONLY"

Gearcase parts to be quoted per hoist serial number.

Sheet #
243-1

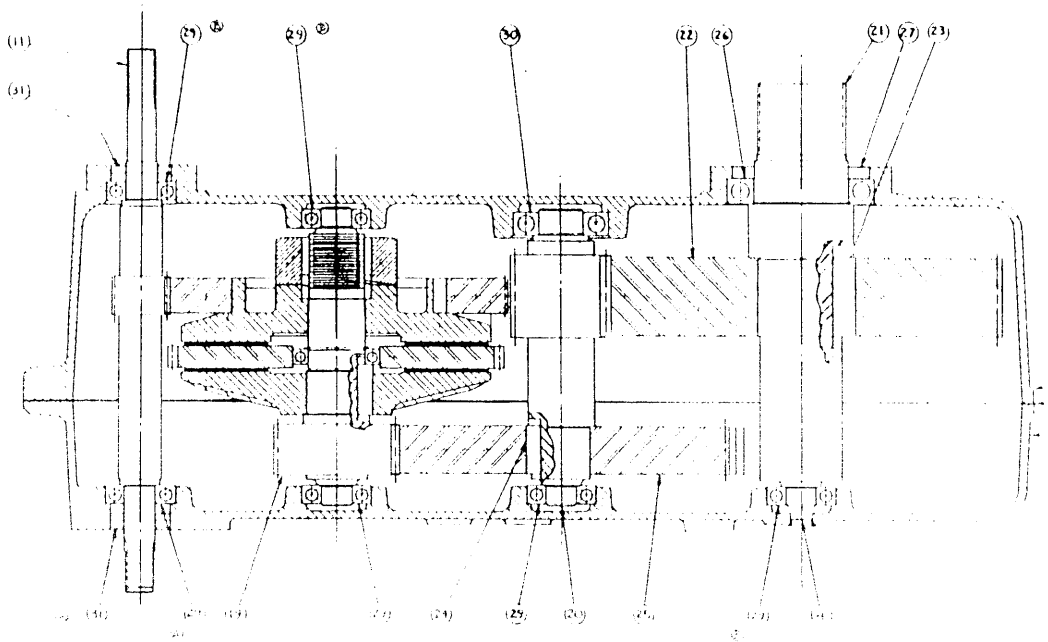

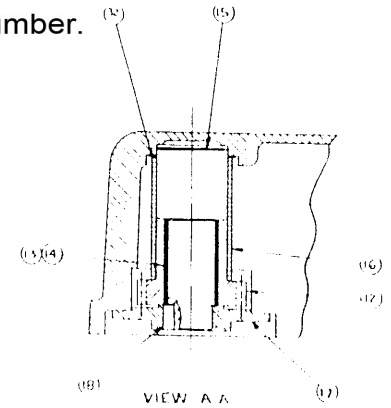

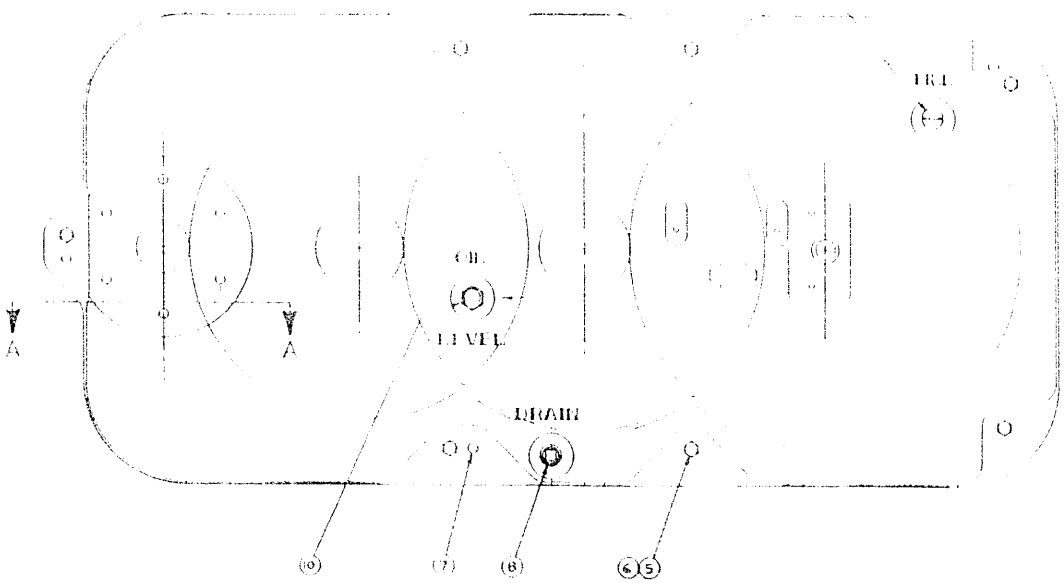

ITEM	PART NO.	DESCRIPTION	QUAN.
32	2209986001	WASHER	1
31	2207978004	OIL SEAL	3
30	6300413100	310K BEARING	1
29	6300613070	307W BEARING	6
28			
27	2207978003	OIL SEAL	1
26	6300201220	BEARING	1
25	2406332GRP	INTERMEDIATE GEAR	1
24	2211971001	INTERMEDIATE GEAR KEY	1
23	2211970001	DRUM GEAR KEY	1
22	2406330001	DRUM GEAR	1
21	2406329001	DRUM SHAFT	1
20	2406331001	INTERMEDIATE SHAFT	11
19	2502510010	LOAD BRAKE ASSEMBLY	1
18	2200482015	KEY	1
17	2307322001	SPRING CLUTCH COVER	1
16	2308774002	CLUTCH SPRING	1
15	2308773001	SPRING CLUTCH SHAFT	1
14	2202829003	BRONZE BUSHING	1
13	2202829006	BRONZE BUSHING	1
12	2308775001	SPRING CLUTCH GEAR	1
11	2406360002	MOTOR EXTENSION SHAFT	1
10	2211808001	SIGHT GAGE	1
9	2204312003	VENT	1
8	6100140061	PIPE PLUG	1
7	6160180650	1/2" DOWEL PIN	3
6	6230010450	5/8" LOCK WASHER	7
5	2209413625	5/8" BOLT	7
4	2211861001	ENDBELL PLUG	1
3	2406364001	GASKET	1
2	2503264001	GEAR CASE COVER	1
1	2503263001	GEAR CASE	1

FRAME 11	REV.- B	GEAR CASE ASSEMBLY
R&M MATERIALS HANDLING, INC. SPACEMASTER HOIST & CRANE PRODUCTS		DRAWING NUMBER 2503262002

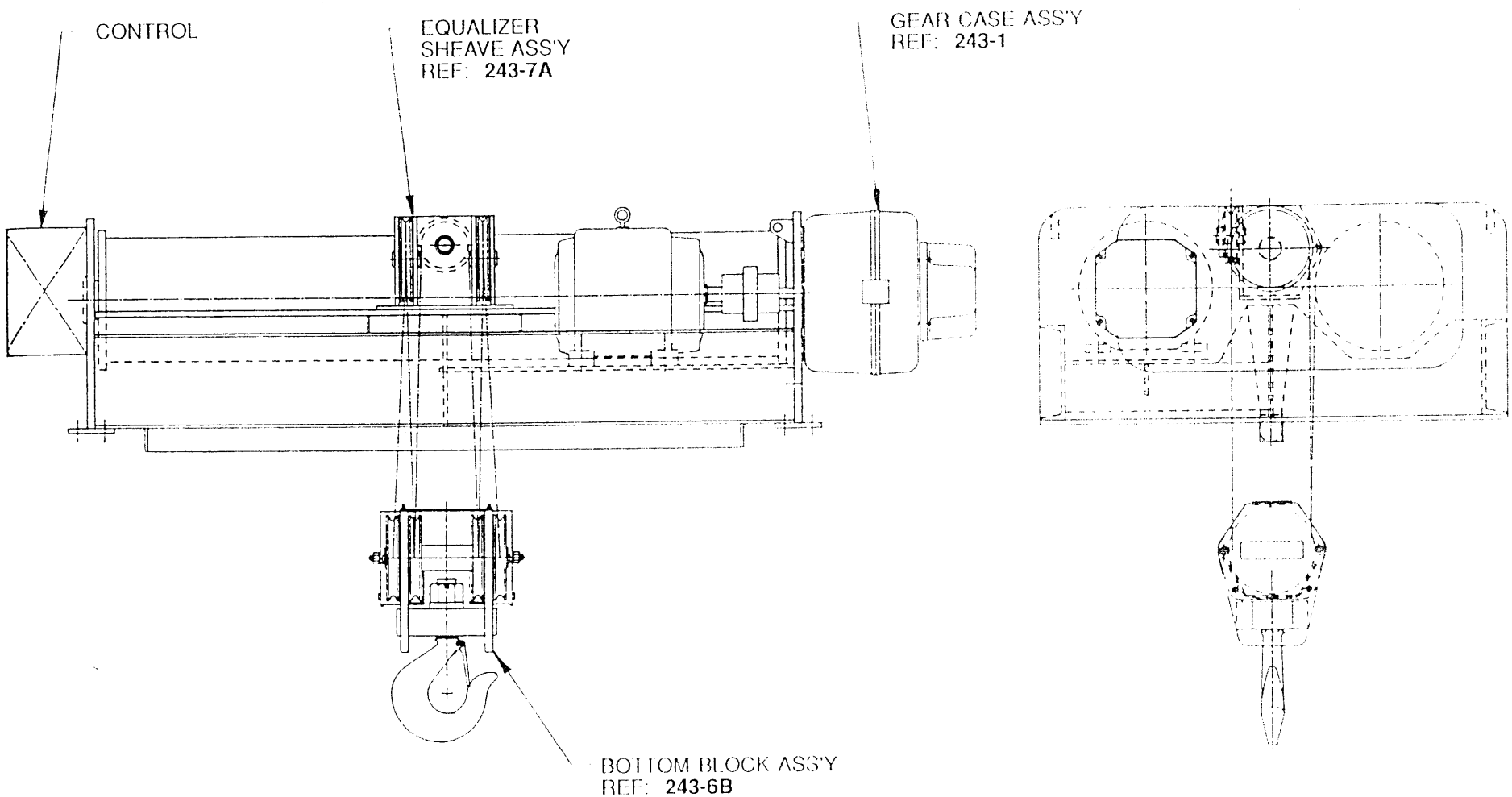

	FRAME 11	REV.	20 TON OUTLINE
Sheet # 243-3A	R&M MATERIALS HANDLING, INC. SPACEMASTER HOIST & CRANE PRODUCTS		DRAWING NUMBER 2503272006

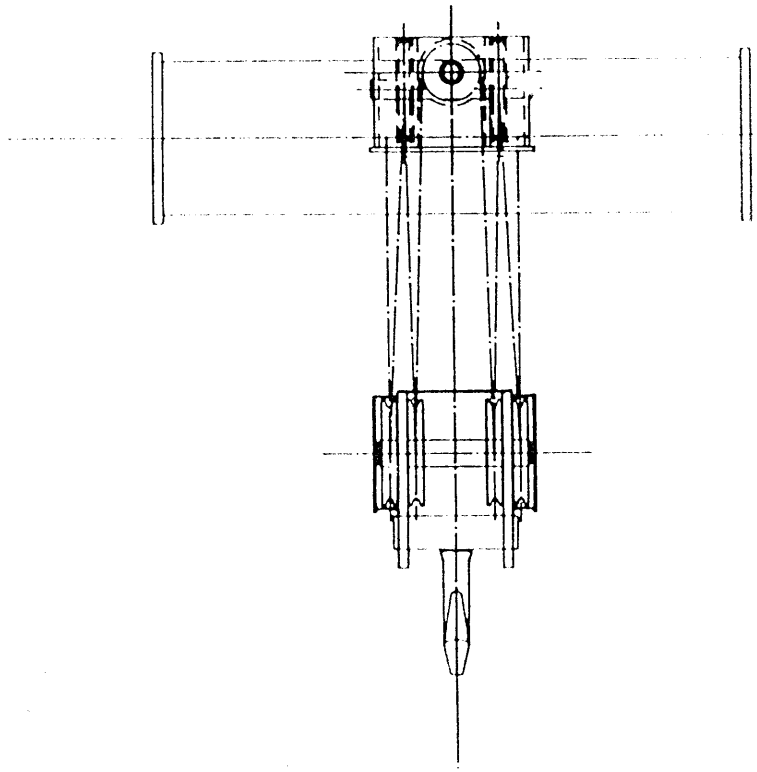

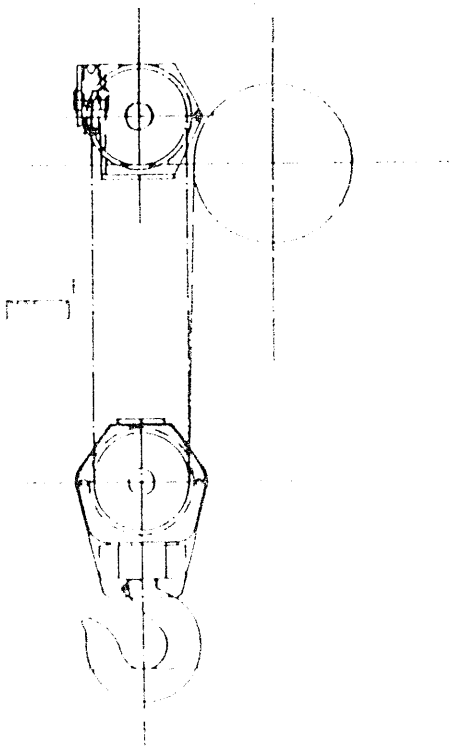

REF:
"I" type - Outline Drawing No. 2503254008
"Z" type - Outline Drawing No. 2503272003

	FRAME 11	REV.	20 TON REEVING
Sheet # 243-5A	R&M MATERIALS HANDLING, INC. SPACEMASTER HOIST & CRANE PRODUCTS		DRAWING NUMBER (See Ref. Above)

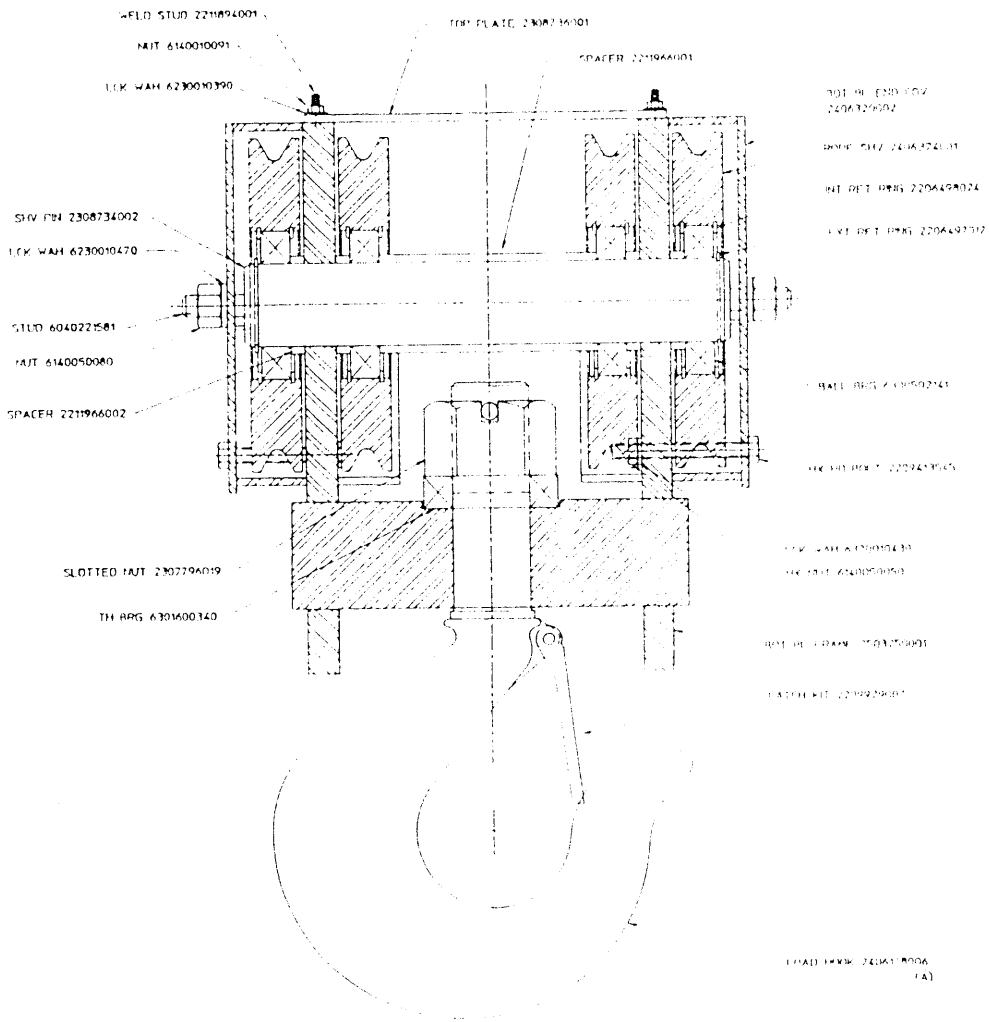

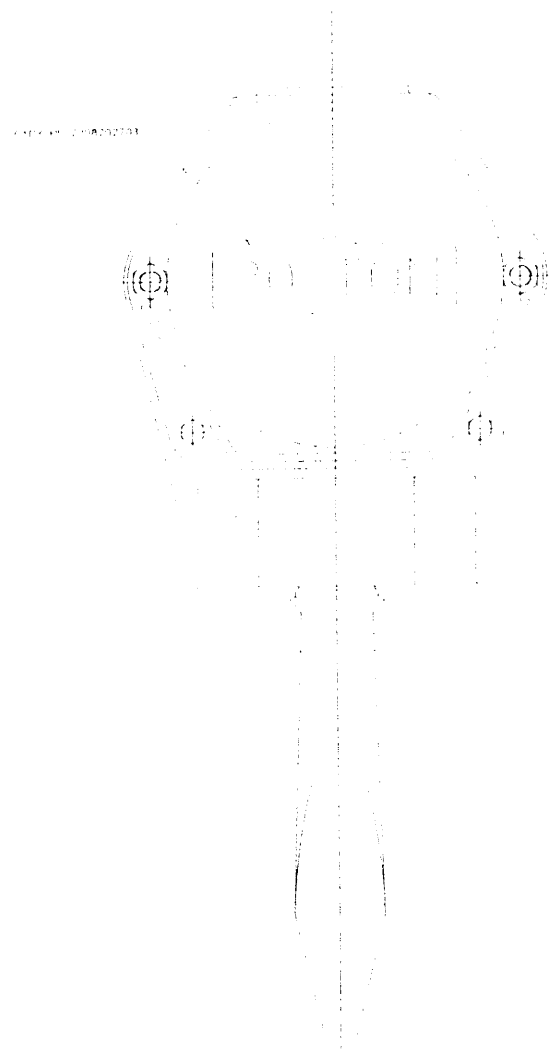

	FRAME 11	REV.- A	BOTTOM BLOCK ASS'Y
Sheet # 243-6B	R&M MATERIALS HANDLING, INC. SPACEMASTER HOIST & CRANE PRODUCTS		DRAWING NUMBER 2503251002

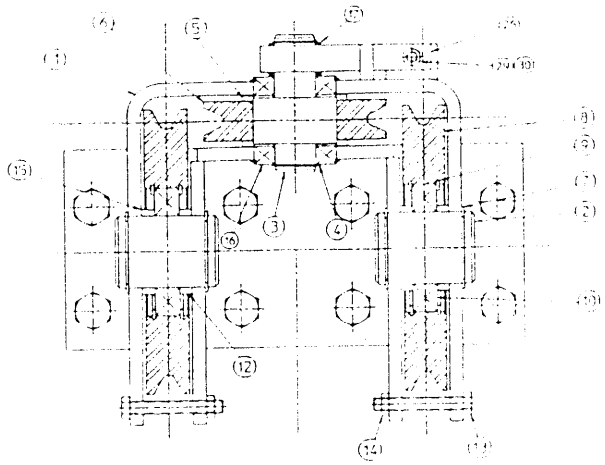

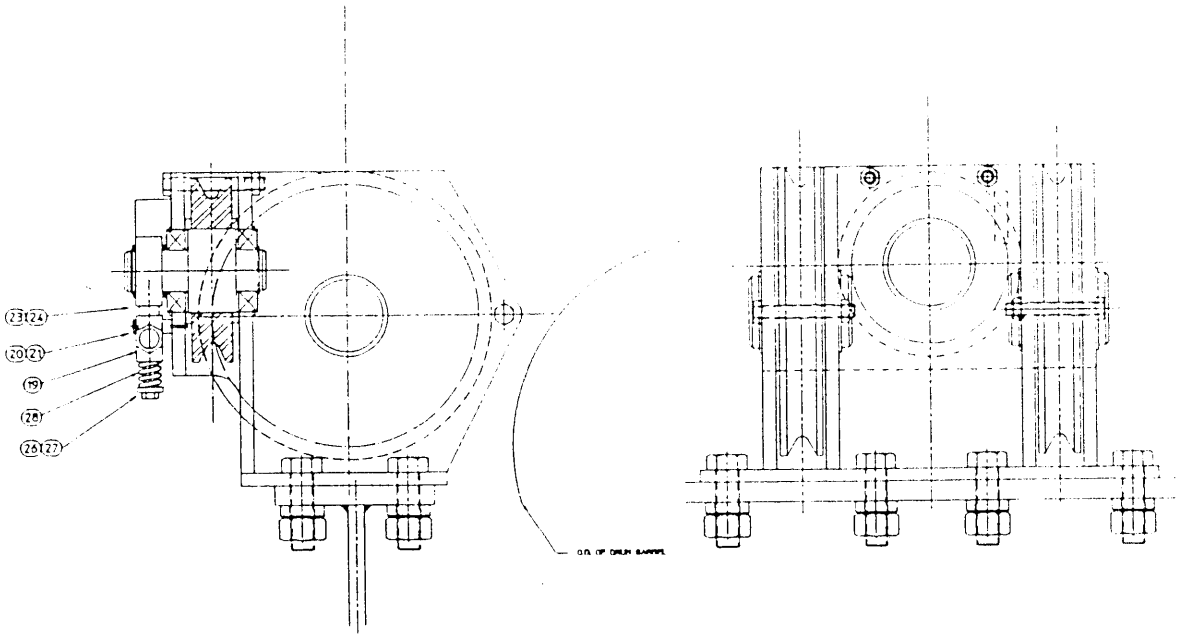

ITEM	PART NO.	DESCRIPTION	QUAN.
33	6140070040	7/8 9 HEX HEAD NUT	8
32	6230010490	7/8" LOCK WASHER	8
31	2209413630	7/8 9 HEX HEAD BOLT	8
30	6140250031	ELASTIC STOP NUT	1
29	6230030051	BOLT WAH	1
28	2211715001	O/L ADJ SPG	1
27	2200419005	WAH	1
26	2211720001	O/L ADJ BOLT	1
25	2308421001	O/L LEVER ARM	1
24	6140010091	HX NUT	1
23	6191510141	HX HD CAP SCR	1
22			
21	6230010371	LCK WAH	2
20	6190060281	10-24 RD HD SCR	2
19	2211716001	O/L LIMIT SWITCH	1
18	6110260140	3/8 KEY X 7/8 LG	1
17	2207728001	SHIMS	5
16	2211717001	BALL BRG	2
15	2211966004	SPACER .436" LG	2
14	6140250059	1/2 13 LOCK NUT	4
13	6020050541	1/2 BOLT	4
12	2211966002	SPACER .467" LG	2
11			
10	6300502141	BEARING	2
9	2206498024	SNAP RING	4
8	2406324001	RUNNING SHEAVE	2
7	2206497012	SNAP RING	4
6	2406325001	EQ. SHEAVE	1
5	2211968003	SHIM	2
4	2206497010	SNAP RING	2
3	2308602013	EQ. SHEAVE PIN	1
2	2211967004	RUNNING SHEAVE PIN	2
1	2503258002	SHEAVE FRAME	1

FRAME 11	REV.- 1	**SHEAVE FRAME ASS'Y**
Sheet # **243-7A**	R&M MATERIALS HANDLING, INC. SPACEMASTER HOIST & CRANE PRODUCTS	DRAWING NUMBER 2503259003

Lenze
Power Transmission

Electromagnetic Spring-Loaded Brake Type 14.448.□□.□

Operation, Instruction, & Parts Manual

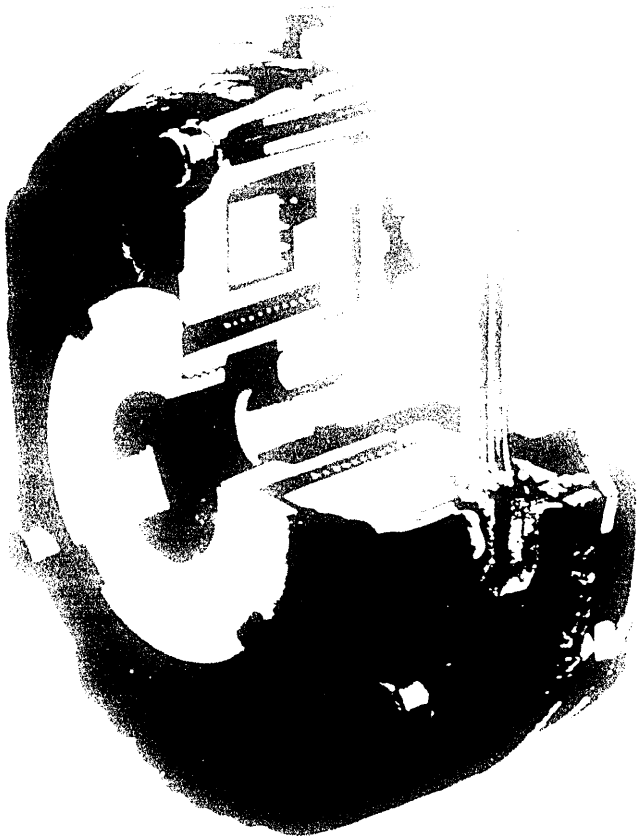

ELECTROMAGNETIC RELEASE SPRING SET BRAKE
TYPE 14.448

TABLE OF CONTENTS

SECTION	
I	SAFETY PRECAUTIONS
II	PRINCIPLES OF OPERATION
III	ACCESSORIES
IV	BRAKE DESCRIPTION
V	ASSEMBLY INSTRUCTIONS
VI	ELECTRICAL CONNECTION
VII	ALTERING TORQUE RATING
VIII	MAINTENANCE
IX	PARTS LIST

SECTION I
SAFETY PRECAUTIONS

1. To prevent electrical shock be sure to disconnect the power to the brake from source before attempting to service or repair.

2. Lock down or secure and tag the brake prior to service or repair.

3. If this brake has been supplied with a manual hand release do not overhaul [illegible]

4. Do not operate brake in atmospheres with explosive gases and dusts or [illegible] substances. The brake can operate in non-explosive dust or with the [illegible] water spray and in [illegible] atmospheres.

5. When storing or installing the friction rotor ensure that oil or grease is kept [illegible] the material surface.

SECTION II
OPERATING PRINCIPLES

A. HOW THE BRAKE SETS

The Lenze Electromagnetic Release Spring Set Brake Type 14.448 as shown [illegible] produces its stopping torque by the use of multiple springs (4) exerting pressure [illegible] the armature plate (2). The armature plate in turn is forced towards the friction plate (5) mounting flange (1) compressing the dual faced friction rotor (6) between the armature plate and the friction plate by mounting flange. Figure 1 illustrates the position of the armature plate in the friction and friction plate in the set position. The rotor is [illegible] the hub [illegible] keyed to the shaft.

B. HOW THE BRAKE RELEASES

Energizing the coil with the proper DC voltage produces an electromagnetic force [illegible] attracts the armature plate (2) opposes the spring force and allows the friction rotor to rotate freely. The axial movement of the friction rotor is accommodated by the [illegible]

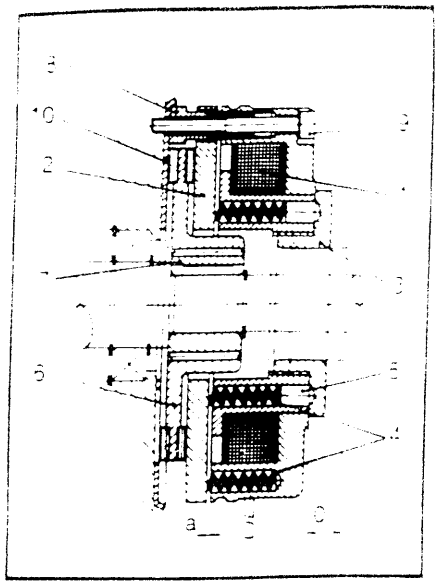

FIGURE 1
Cross Sectional View

TABLE 1

Size	06	08	10	12	14	16	18	20	25*
Torque lb.-ft.	3	6	12	24	44	60	110	175	260
Torque reduction /step lb.-ft.	.074	.148	.443	.885	1.18	1.55	1.03	1.48	3.69
O_1 (fig. 1) inch	.24	.26	.33	.39	.45	.45	.51	.59	.63

*There are no steps for this size. The figure given relates to a rotational angle of 45° of the adjuster.

SECTION III

ACCESSORIES

A. MANUAL RELEASE HANDLE (Position 13, Figure 2)

In the event of power failure the brake can be released manually. Pulling the handle towards the torque adjusting ring releases the friction rotor by moving the armature plate away. The release is a deadman type so that when you let go the brake immediately returns to its set position.

B. SEAL (Position 11, Figure 2)

Stretch the seal over the brake, allow it to snap into the grooves provided around the [illegible] body and friction plate. The plate is now protected against [illegible]. The seal is also dead in bad environments where it is necessary to keep the [illegible] friction dust contained inside the brake.

C. MOUNTING FLANGE (Position 12, Figure 2) OR FRICTION PLATE (Position 11, Figure 3)

The mounting surface should be ground to a 5-8 μm finish. On applications that do not have a suitable counter surface for the rotor to act against, Lenze offers a friction plate or a mounting flange as an accessory.

D. RECTIFIER

[illegible]

E. TRANSFORMER (RECTIFIER)

Transformer Rectifier [illegible]

SECTION IV

STANDARD BRAKE DESCRIPTION

[illegible] 24V-5.8

BRAKE TYPE ——— HUB BORE

BRAKE SIZE ——— COIL VOLTAGE

DESIGN ——— [illegible]

ACCESSORIES

0 - None
1 - Seal
2 - Hand Release
3 - Mounting Flange
4 - Mounting Flange and Hand Release
5 - Mounting Flange and Seal
6 - Seal and Hand Release
7 - Seal, Hand Release and Mounting Flange

SECTION V

ASSEMBLY INSTRUCTIONS

1. If a suitable counter braking surface for the friction rotor (6) is not available, separately screw the mounting flange to the machine. If the friction plate is used, it is fixed to the machine via the tightening screws discussed in Step 6.

2. Press the splined hub (7) onto the keyed shaft. Shaft tolerances should be a press fit (Refer to Table 2 for specific shaft tolerances). Secure the hub axially with snap rings. Hubs with set screws are also available.

3. Slide the friction rotor (6) onto the splined hub (7). (NOTE: If the friction plate is used slide it over the splined hub prior to installing the friction rotor.)
NOTE: If you are not fitting a hand release kit, then proceed to Step 5.

4. Assemble all hand release components as shown in Figure 2. Do not tighten nuts (3A).

5. Place the mounting bolts (9A) and washers (9B) in the holes of the stator assembly.

6. Screw the brake to its mounting flange or counter braking surface with the mounting bolts (9A) using torque values consistent with normal mechanical practice.

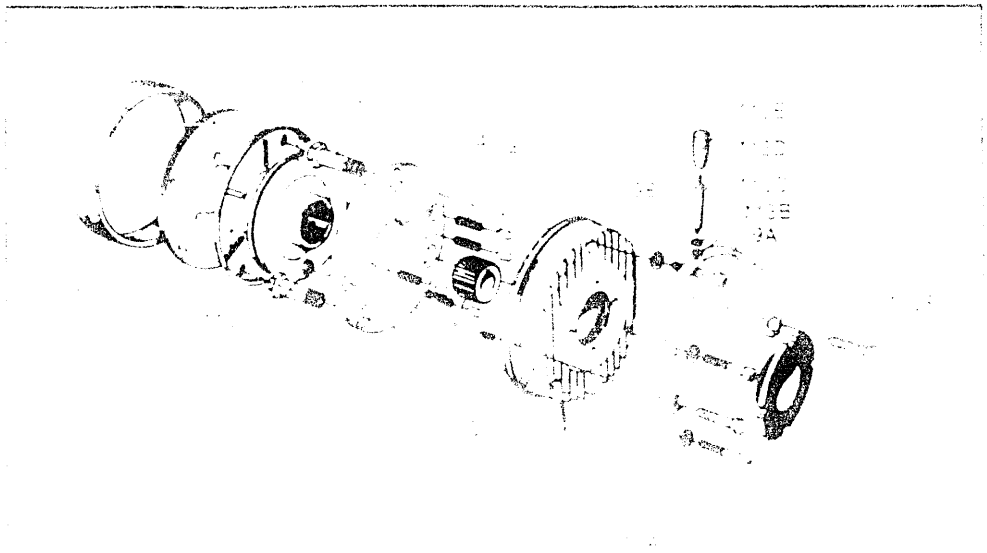

FIGURE 2 (Optional Equipment)
Exploded View

1 - Shaft
2 - Armature Assy
3 - Torque Adjustment Nut
4 - Stator
5 - Rotor
6 - Friction Rotor
7 - Hub
8 - Spring
9A - 9B - Mounting Bolt & Washer
10 - Friction Plate
11 - 12A
13 - Mounting Flange
14 - Hand Release Kit

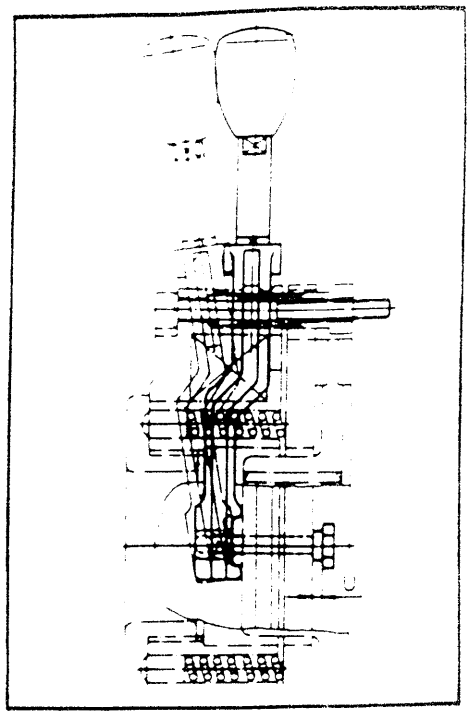

FIGURE 3
Hand Release "U" Dimension

7. Remove the transit clips from the adjustment tubes. The gap is preset at the factory [illegible] the clips maintain proper adjustment during transit and storage. The clips must be re[illegible] prior to operation.

8. If necessary, you can check the air gap with a feeler gauge in 3 positions. NOTE: Air gap dimension is illustrated in Figure 1 denoted by "a".

9. If air gap adjustment is necessary, loosen bolts (9A), rotate the adjustment tube [illegible] approximately [illegible] turn, retighten bolts (9A), and measure air gap [illegible] tolerance, repeat procedure.

10. Set the hand release gap (Dimension "U" Figure 3) to the value indicated in Table [illegible] tightening nuts (10H). Once set the nut is locked with factory applied thread locking [illegible] bound. Any change in this setting could interfere with the safe operation of the brake.

TABLE 2 Shaft Tolerance

SHAFT DIAMETER RANGE	TOLERANCE
3.32 - 25.64 mm	+ .0004 - .0000 mm
3.32 - 45.64 mm	+ .0005 - .0001 mm
25.32 - 31.18 mm	+ .0006 - .0001 mm
[illegible] - 31.32 mm	+ .0007 - .0001 mm
[illegible] mm	+ .0008 - [illegible] mm

TABLE 3 Air Gap & Hand Release Values

Size	06	08	10	12	14	16	18	20	25
a min	.008	.008	.008	.012	.012	.012	.016	.016	.020
a max	.021	.024	.024	.040	.043	.055	.055	.060	.067
[illegible]	[illegible]	[illegible]	.040	.040	.040	.059	.059	.059	.059

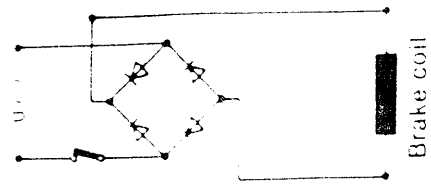

A.C. switching
A.C. switching has a considerable effect on the 'turn off time' of brake coils. It is not recommended where fast reaction times are required.

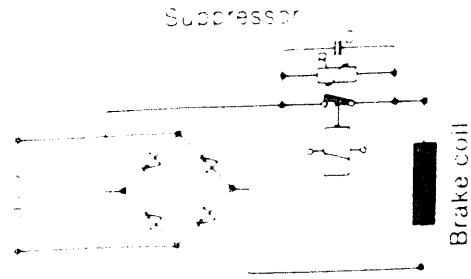

D.C. switching
'Turn off' times are much shorter than A.C. switching but for larger brakes with higher power coils one of our type 14.198.00.0.0 suppressors across the switch is recommended.

SECTION VI

2.4 ELECTRICAL CONNECTION

The brake requires D.C. Voltage to operate correctly. The necessary D.C. Voltage can be provided by one of our Transformer/Rectifiers or a Full Wave or Half Wave Rectifier or your own supply.

SECTION VII

ALTERING THE TORQUE RATING

The brake is supplied from the factory with the nominal torque settings. This torque can be reduced by unscrewing the torque adjustment ring (3) with a spanner within the limit of the (3) dimension given in Table 1 and depicted in Figure 1. The torque adjustment has an intent action with torque variation per step given in Table 1.

SECTION VIII

MAINTENANCE

In most applications, the brake needs practically no maintenance. However, after a long period of operation, or if the brake has a high duty cycle, adjustment of the air gap (a in Figure 1) may be necessary. When the 'a max' value shown in Table 3 is exceeded, adjust the value back to 'a' using the air gap adjustment instructions described in Section 7 Step 9 of the assembly instructions.

SECTION IX

PARTS LIST AND ORDERING

When ordering parts refer to the exploded view in Figure 3 for the part description.

Ordering Example:
Give the following
1) 14.448 ...
Size

2) Part Description
3) Coil Voltage
4) Hub Bore Diameter (inches or mm)

Lenze Corporation • 311 Route 46 W • Fairfield, New Jersey 07006
Telephone: (201) 227-5311 Telex: 642-520 Telefax: (201) 227-7423

Printed in USA Technical Alterations Reserved

Spare part list

Electromagnetic brake type 14.448

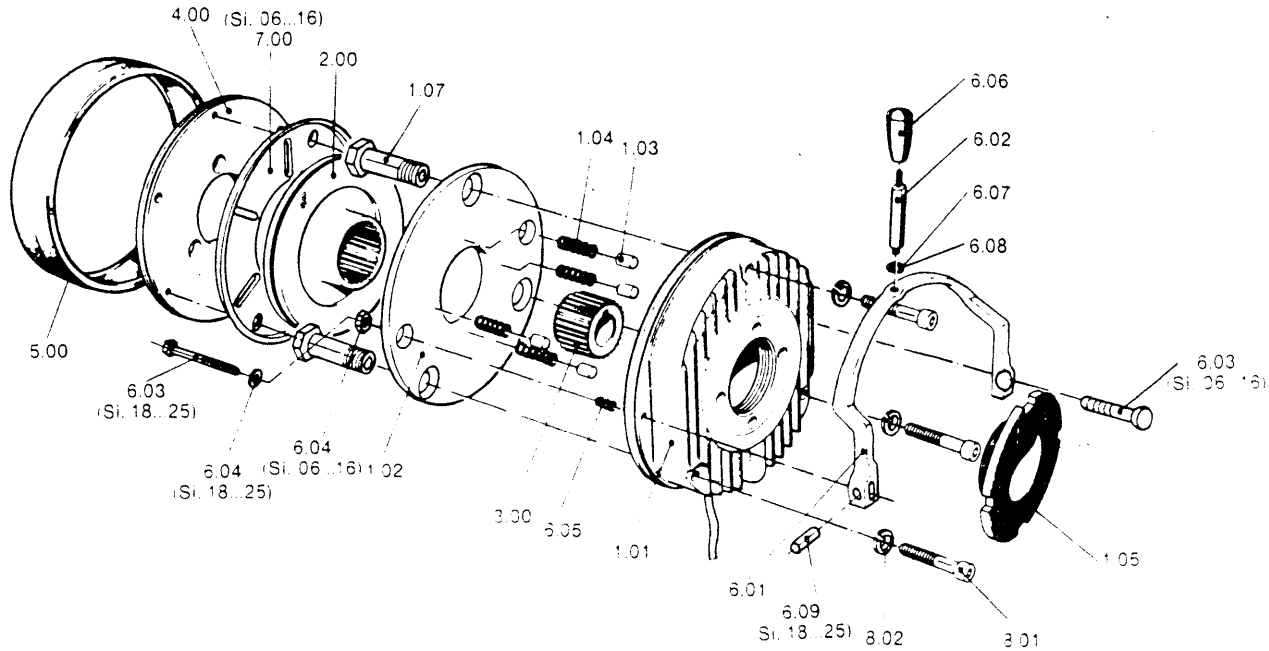

Position

1.00 stator compl.
(DC voltage (not supply voltage)
1.01 stator
(DC voltage (not supply voltage)
1.02 armature plate
1.03 tappets
1.04 springs
1.05 torque adjusting ring
1.07 adjustment tube
2.00 aluminium rotor
(for sizes 06 and 08 a star hub + rotor is available, see page 7)
3.00 splined hub
(hub bore, key dimensions)
4.00 flange
5.00 seal
6.00 hand release kit
(standard or reinforced kit (size 06–16)
6.01 hand release stirrup
(standard or reinforced stirrup (06–16)
6.02 hand release lever
6.03 bead bold (size 06 . . . 16)
(hexagon head screw (size 18 . . . 25)
6.04 hexagon nut (size 06 . . . 16)
(washer (size 18 . . . 25)
6.05 spring
6.06 knob
6.07 spring washer
6.08 plastic washer
6.09 bold (size 18 . . . 25)
7.00 friction plate (size 06 . . . 16)
8.00 assembly kit
(mounting bolt length)
8.01 mounting bolts
(mounting bolt length)
8.02 lockwasher

dering example
448.12 – pos. 6.00 hand release kit, standard

Lenze

Altering the torque type 14.448

It is possible to change the torque down from its nominal value by approximately 40 % if the characteristic torque is changed at the springloaded brake type series 14.448 by turning the adjustment ring the the following technical parameters change: Reaction delay times t_1 and separating times t_2 change according to the diagram with the operating time factor as compared to the values given in the table

[illegible]	[illegible]	[illegible]	[illegible]	[illegible]	[illegible]	[illegible]	[illegible]	[illegible]	[illegible]
Characteristic torque [illegible]	[illegible]	[illegible]	[illegible]	[illegible]	[illegible]	[illegible]	[illegible]	[illegible]	[illegible]
Reaction delay time [illegible]	[illegible]	[illegible]	[illegible]	[illegible]	[illegible]	[illegible]	[illegible]	[illegible]	[illegible]

Operating time change depending on the characteristic torque setting

Altering the torque type 14.448 via [illegible]

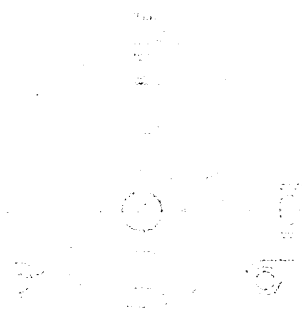

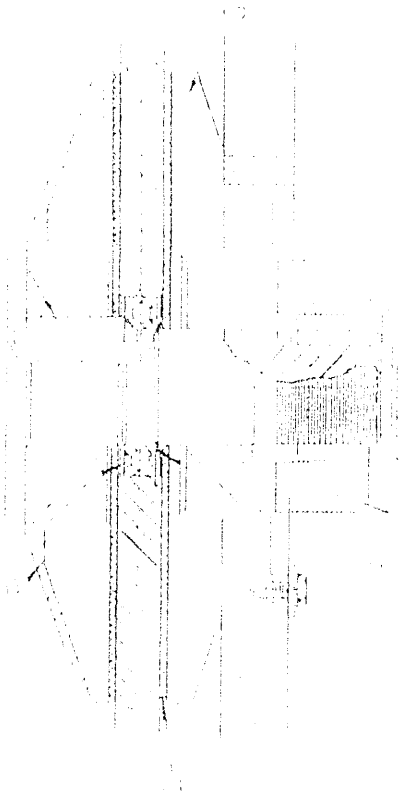

ITEM	PART NO.	DESCRIPTION	QTY
8	210472504	[illegible]	1
7	[illegible]	[illegible]	1
6	320075-001	[illegible]	1
5	70497-037	[illegible]	1
4	210463000	[illegible]	1
3	50289[illegible]	HUB DISC	1
2	630020[illegible]	BRG.	1
1	210463[illegible]	[illegible]	1

MATERIAL
DRAWN [illegible] DATE [illegible]
APPROVED DATE
TOLERANCES

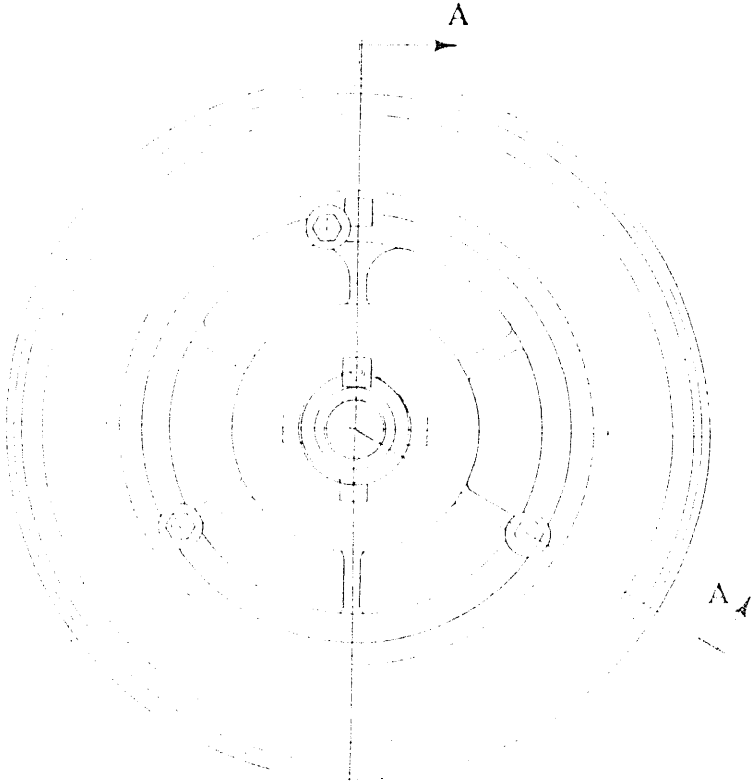

FRAME
PART [illegible]
LO BRK LAYOUT
ROBBINS & MYERS
Flow Division of FLOWE Materials Handling, Inc.
CHANGE LEVEL
DRAWING NUMBER

LOAD BRAKE

All load brakes are self-adjusting and require a minimum of maintenance. Wear on friction disc should be checked during any gear case maintenance. Replace discs when thickness reaches 1/16". To adjust for disc wear, or reset after disc replacement, remove the key from the cam nut. Rotate cam nut/load brake gear until brake is closed snugly. Back off cam nut/load brake gear just enough to replace key in the first available key slot. Retighten load brake gear and check the clearance between the cam nut and spider gear shoulders. The clearance should be between 1/8" and 3/8". If the gap is less than 1/8" it will be necessary to use the second available key slot. In no case should initial gap adjustment exceed 7/16".

Brake should be readjusted whenever gap exceeds 5/8". See Figure 6-1.

The load brake should be checked for proper holding action after any load brake maintenance is performed.

To check to see whether load brake is holding properly, attach approximately a 25% capacity load to hook and raise off floor 6". Release motor brake by backing off center adjusting screw approximately 1 turns. Load should remain suspended. If load drifts to floor, check for malfunctioning spring clutch assembly or worn friction discs. Repair/replace as necessary.

Note: Severe impact or shock loads on hook due to improper handling of loads may result in a locked load brake. Load can be raised, but motor torque is not sufficient to unlock brake to permit lowering, and motor stalls. If load brake does not release after several inchings of the down button, the load must be removed from the hook before manual efforts are made to unlock the brake. It is recommended that the unlocking and subsequent inspection of load brake be performed by a serviceman experienced in these areas.

Figure 6-1