# Manual for

# LoadMate Electric Chain Hoist Wiring Diagrams for Crane Applications

## Wiring Diagram Selection Chart

Is the pushbutton mounted on the hoist?

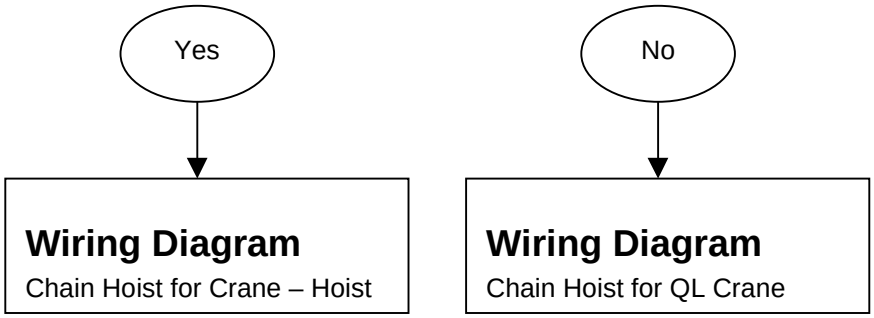


**** Bridge Transformer Must Be Used For All Motions.***

# Chain Hoist for QL Modular Crane – PBR Style Push Button Pendant

LM Electric Chain Hoist Wiring Instruction - Chain Hoist for QL Modular Crane

For the QL modular crane packages, the push button pendant is mounted on the bridge crane, utilizing a sliding festoon trolley. All leads from the pendant are terminated to the bridge control panel. The hoist receives the hoist and trolley control leads from the bridge panel via a festoon cable.

QL modular crane packages will utilize the crane mounted push button pendant arrangement.

## Use Bridge Control Transformer for All Motions

1. On the LM05 add the mainline power feed to the load side of the K10 contactor. On the LM10, 16, 20, 25 add the mainline power feed into the normal position.

2. On the LM05 remove the F100 transformer use.

3. On the LM10, 16, 20, and 25, disable the transformer by removing wires as shown on wiring diagram.

4. On the LM10, 16, 20; 25 jumper A2 on the K10 contactor to X1:10 on the terminal strip.

5. Must purchase proper pendant plug adapter.
   2309717006 - adapter from X23 to Molex plug
   2309717051 - PB pigtail from X23 to no plug

***Factory not responsible for wiring completed in field. This is just a note to assist in the wiring change.***

PBR Style Push Button Pendant

## LM05 Single Speed Hoist 208v or 230v

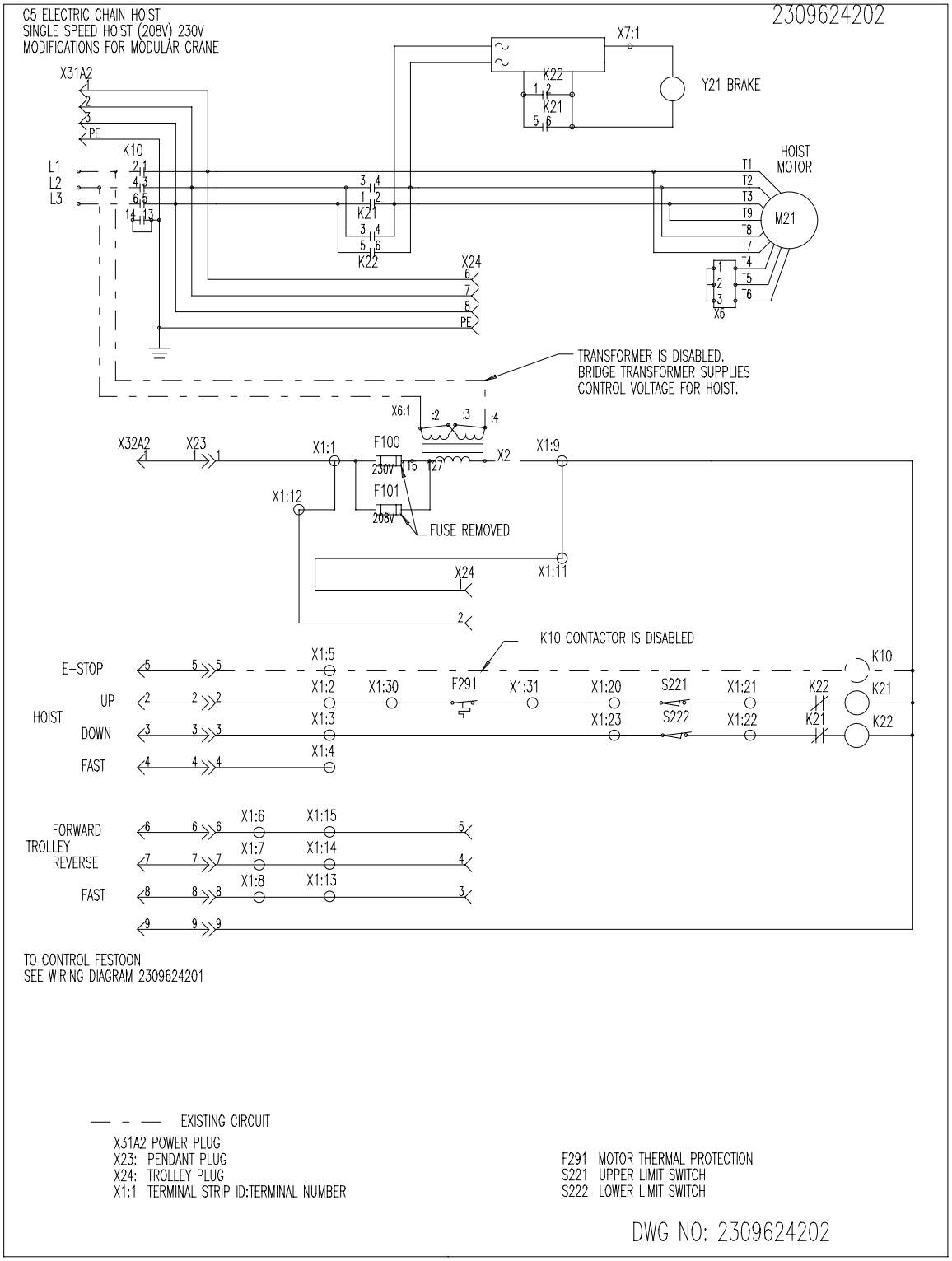

## LM05 Single Speed Hoist 460v

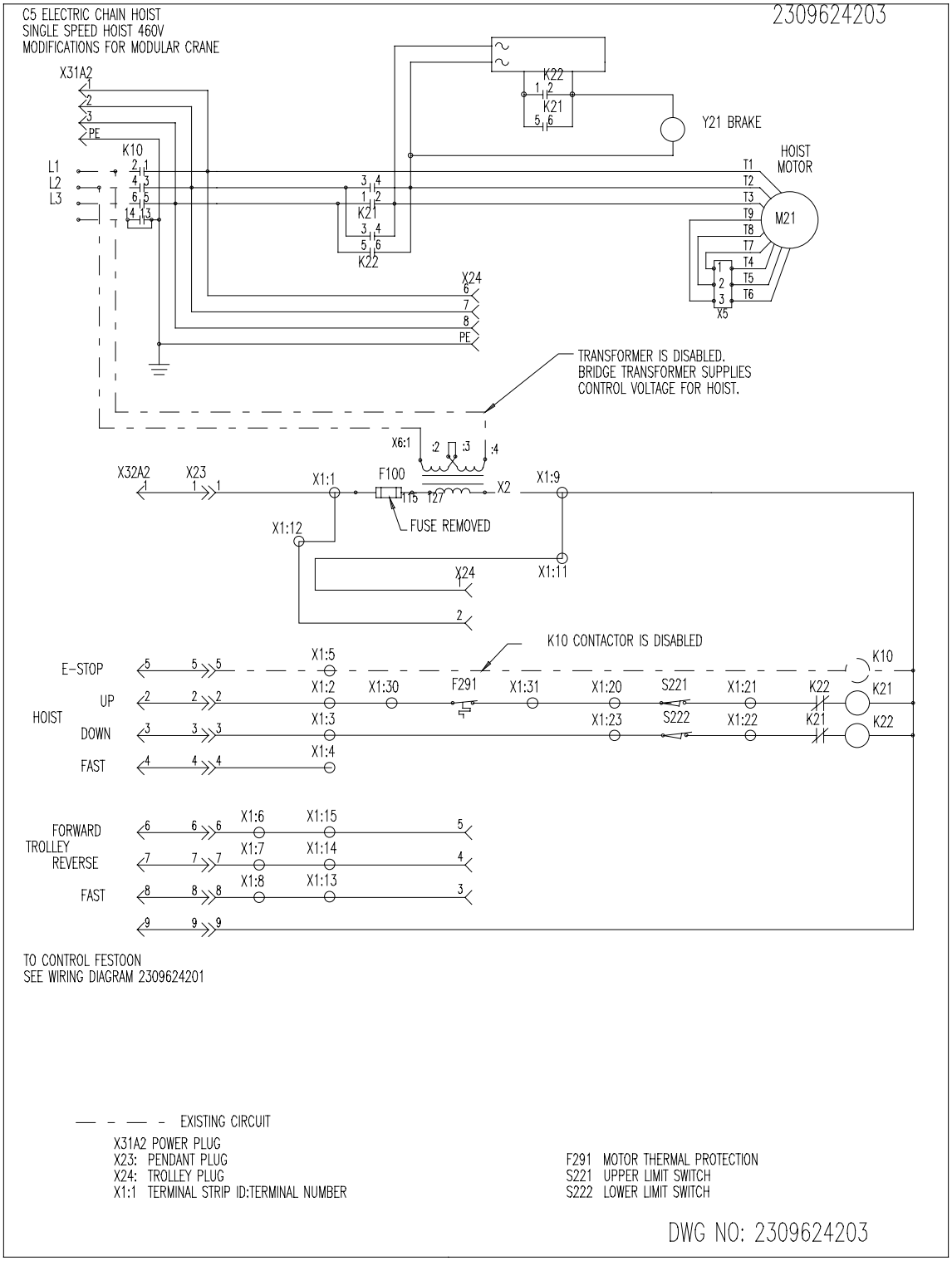

## LM05 Two-Speed Hoist 208v or 230v or 460v

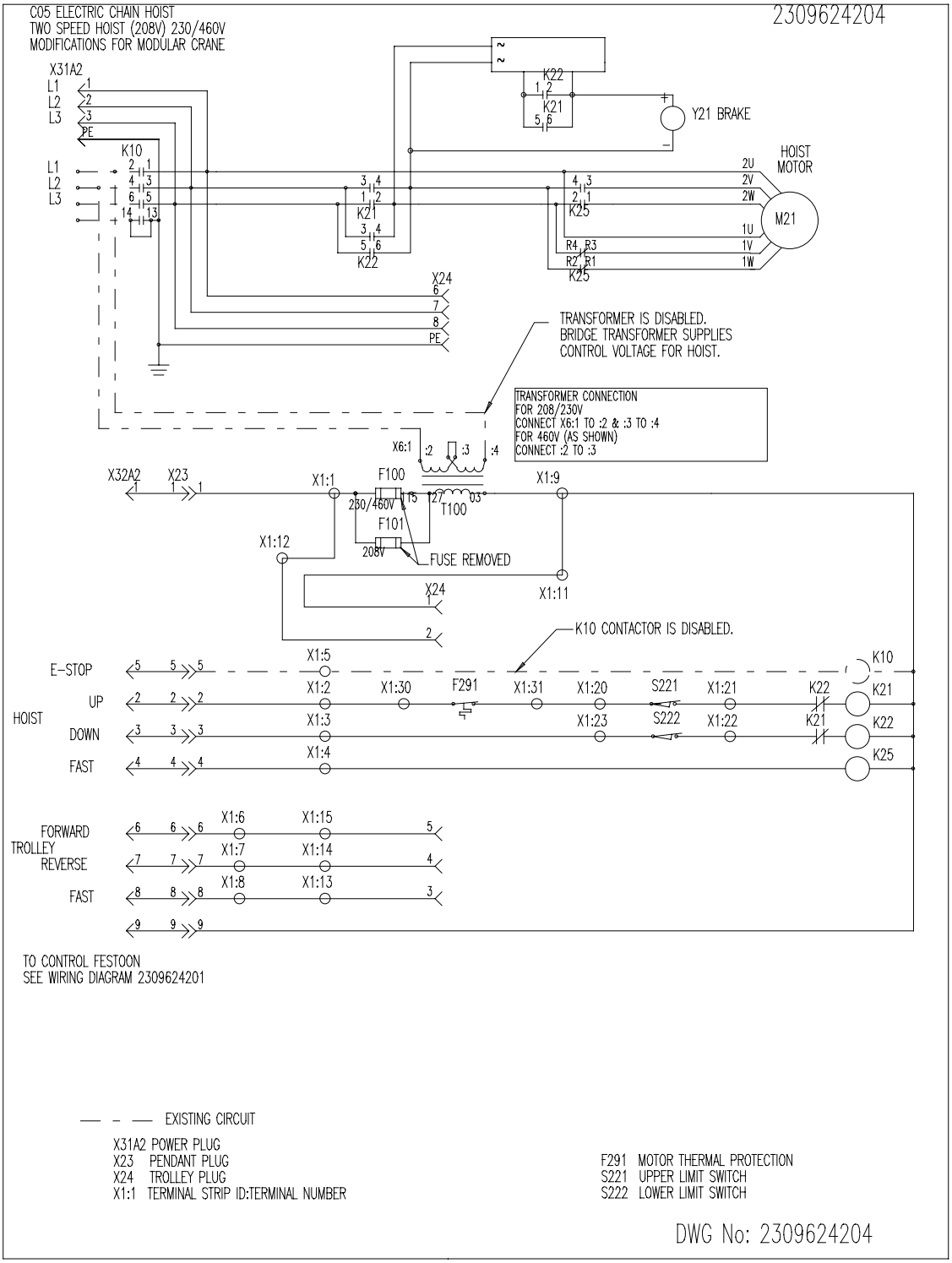

## LM05 Two-Speed Hoist 575v

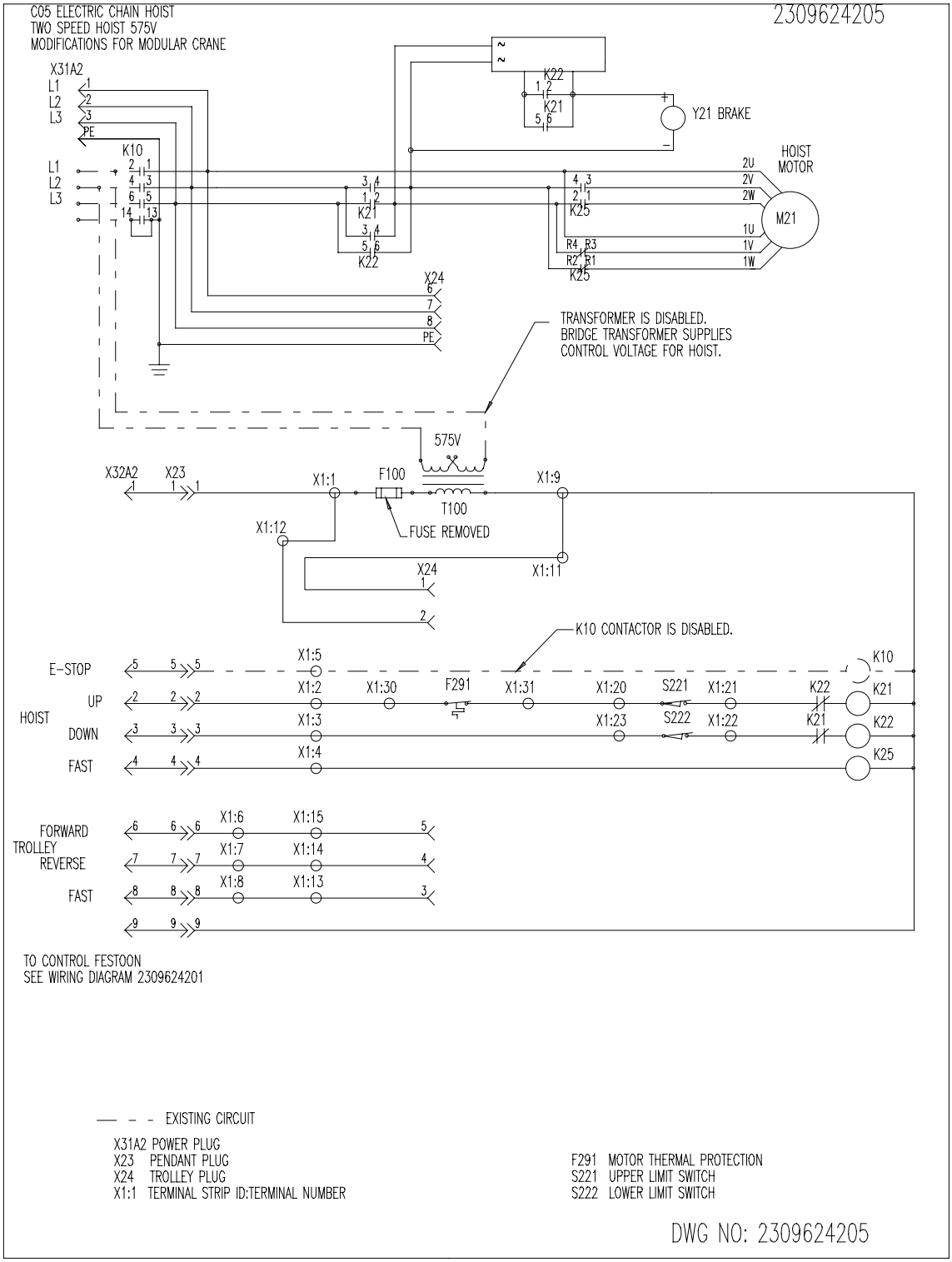

## LM10 Single Speed Hoist 208v or 230v

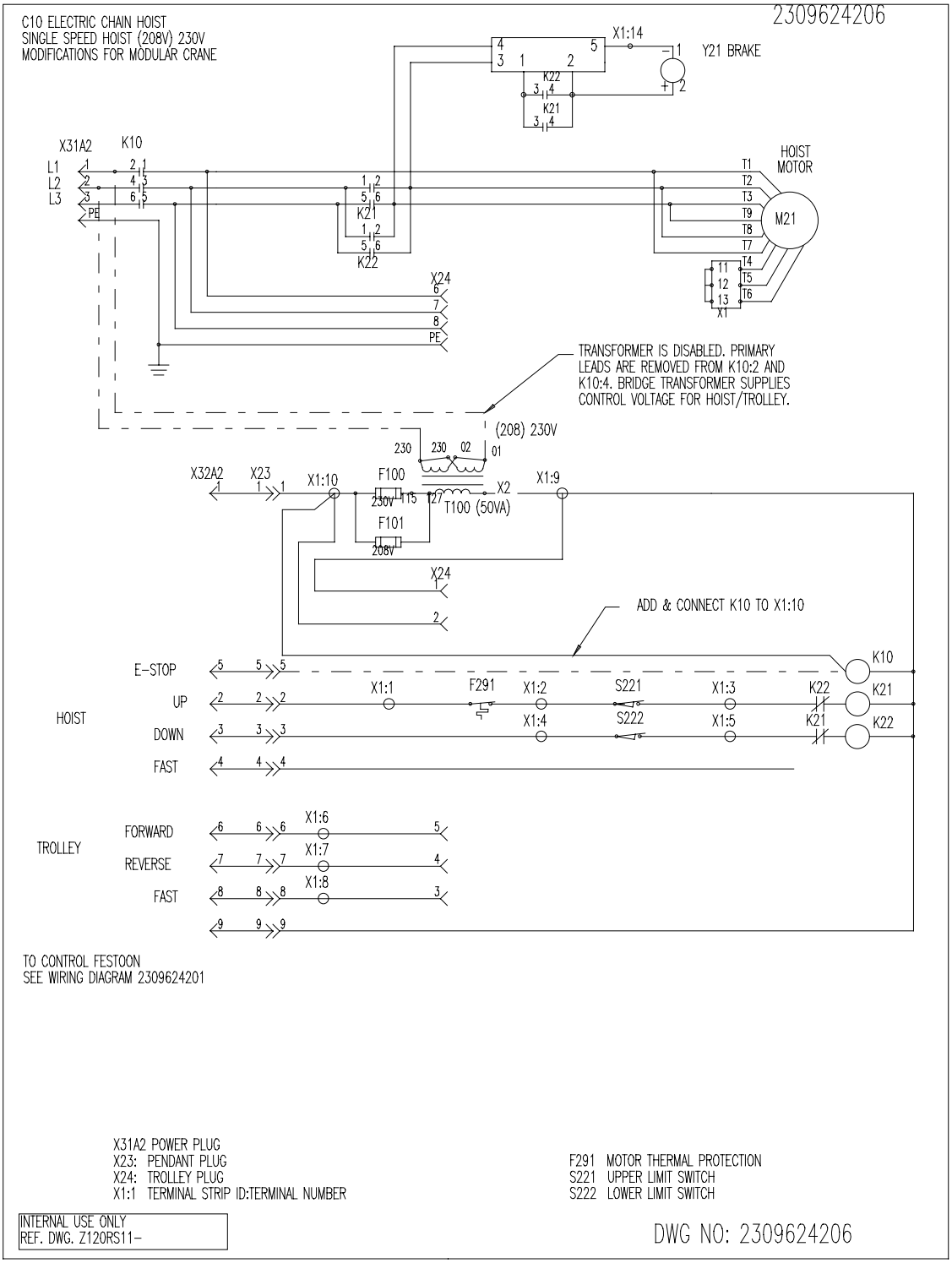

## LM10 Single Speed Hoist 460v

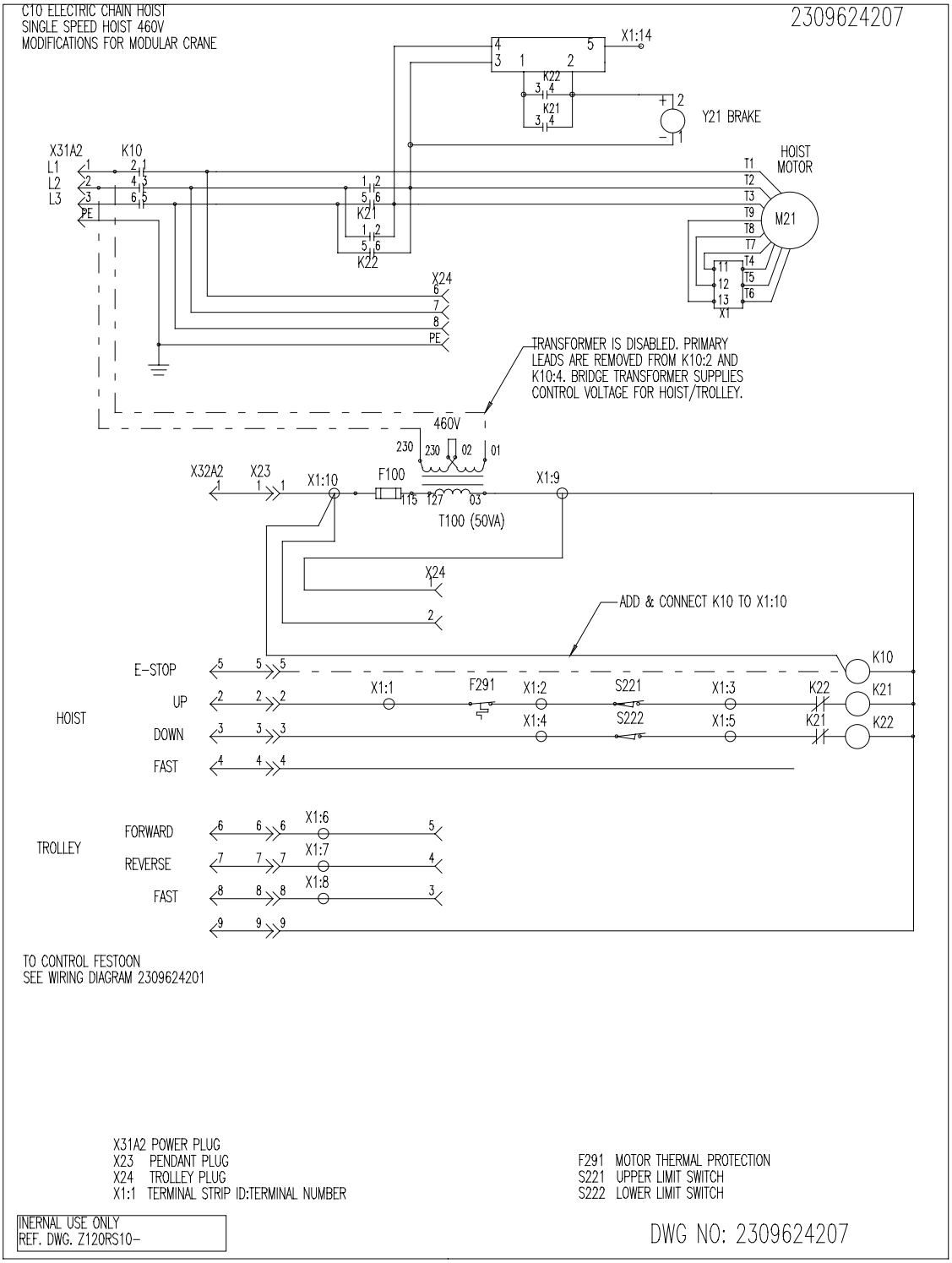

## LM10/LM16/LM20/LM25 Two-Speed Hoist 208v or 230v or 460v

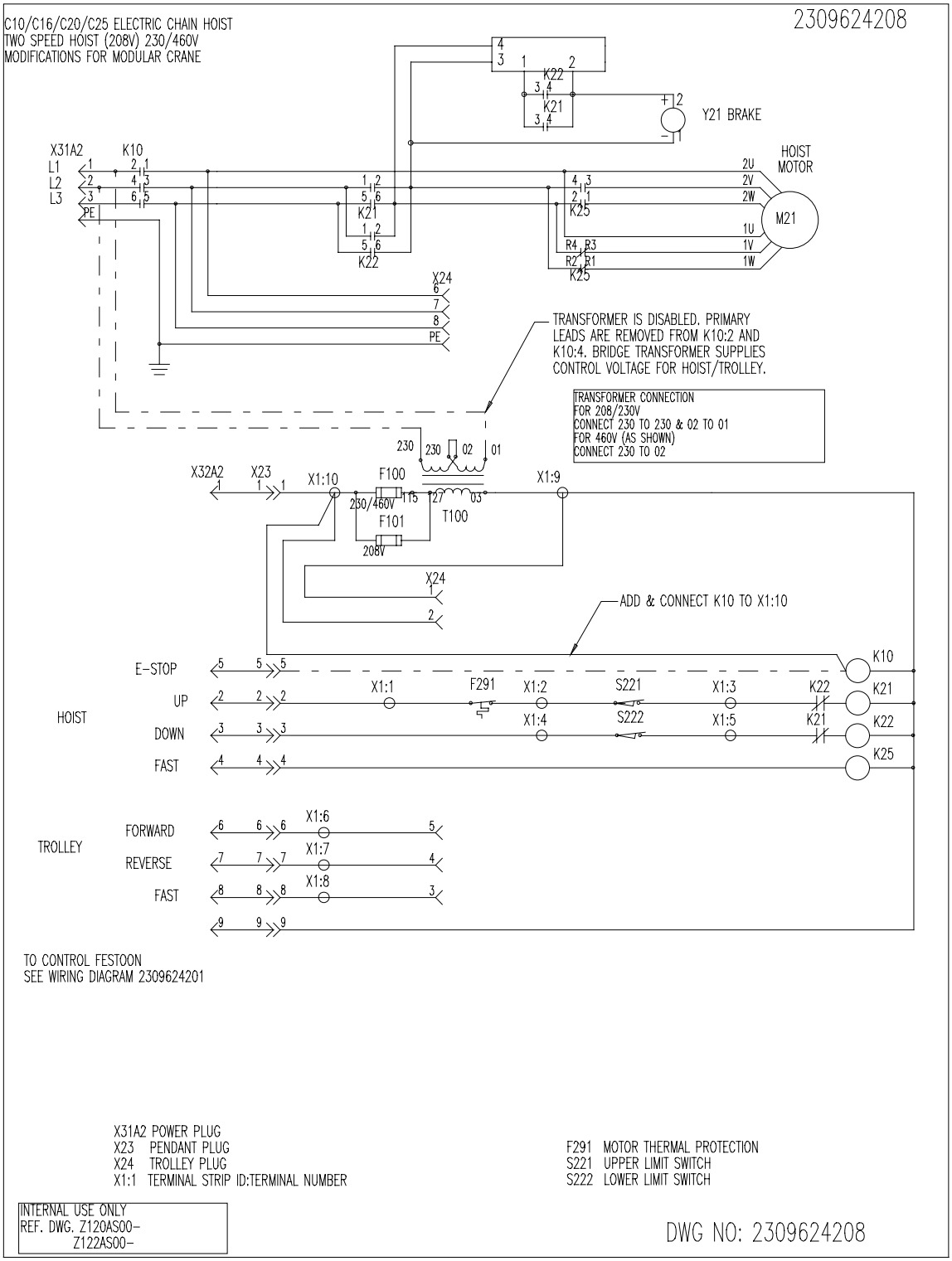

## LM10/LM16/LM20/LM25 Two-Speed Hoist 575v

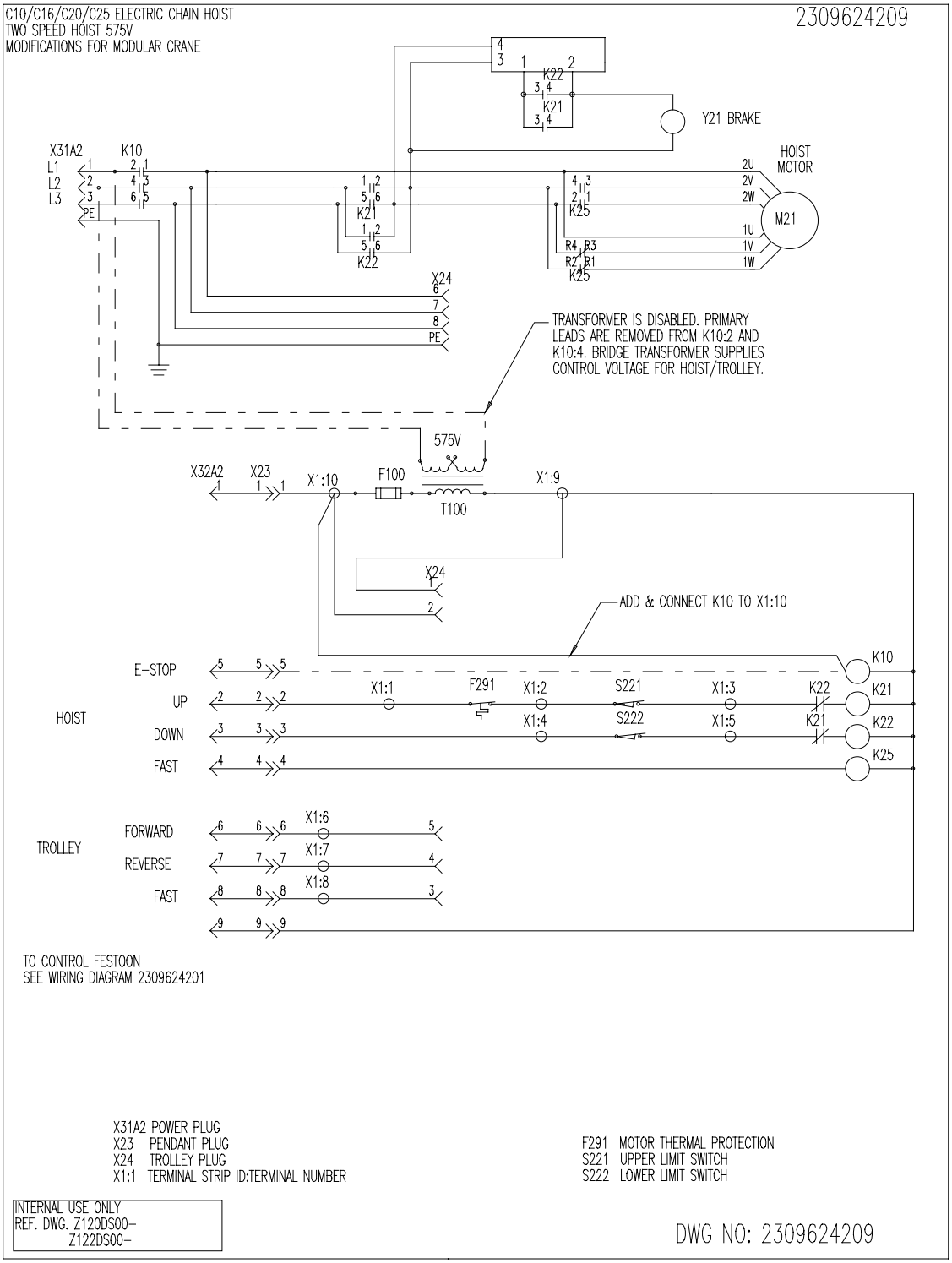

# QL Modular Crane Pendant

## LM05/LM10/LM16/LM20/LM25 Electric Chain Hoist

This wiring diagram of the bridge controls (shown below) is for general reference only. A wiring diagram for the bridge controls is generated to the order to reflect the components supplied. It is furnished under a separate cover.

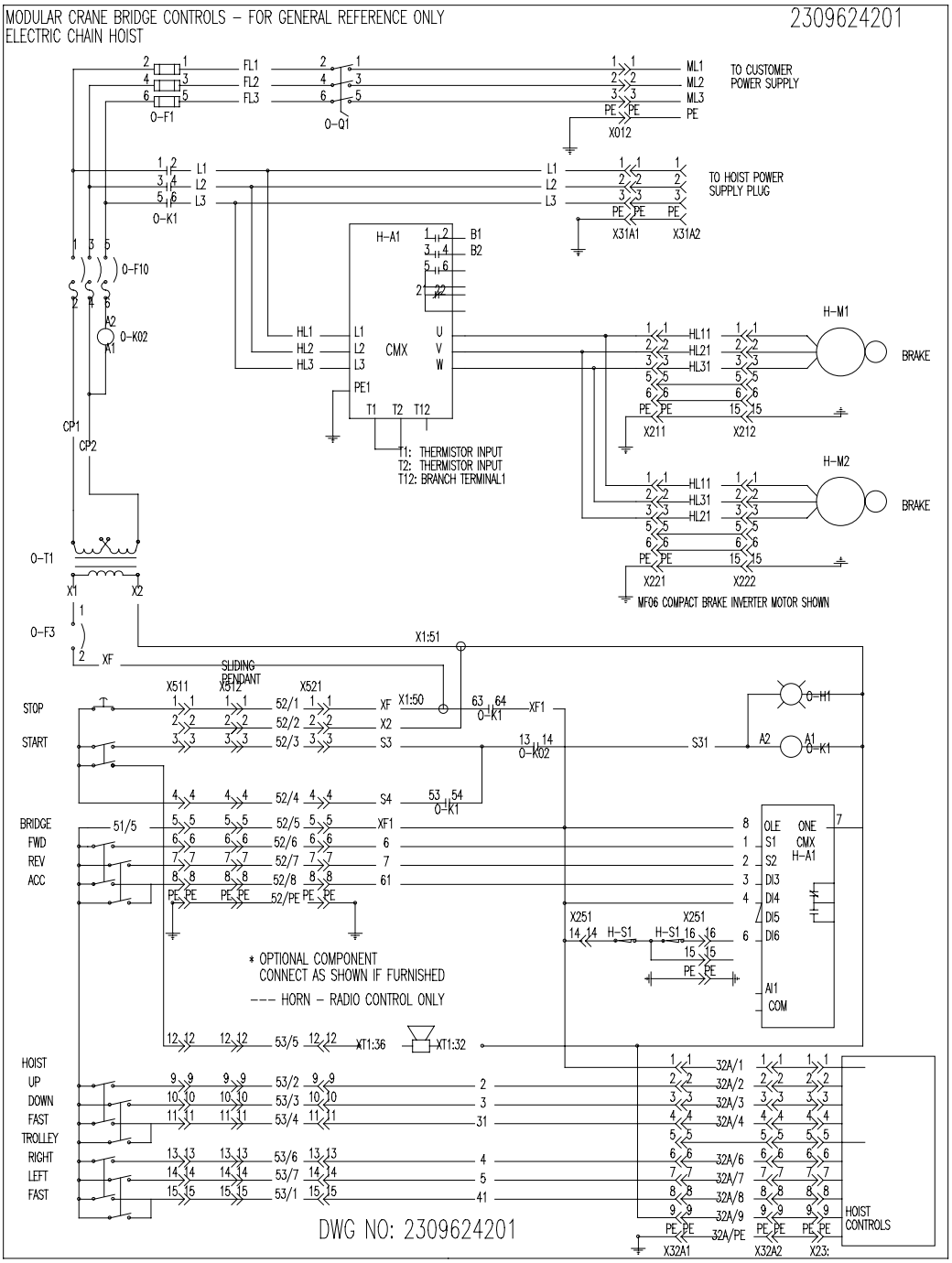

# Chain Hoist for Crane – Hoist Mounted Push Button Pendant

LM Electric Chain Hoist Wiring Instruction - Chain Hoist for Crane

If the push button pendant is mounted to the chain hoist, all leads from the pendant (including the bridge button leads) are brought in to the hoist control panel.

## Use Bridge Control Transformer for All Motions

1. Rewire X23 plug in hoist body. (X23 – the female side of the pendant plug in the hoist control panel)

   a) Cut two (2) wires approximately 6" long and crimp female plug onto one end. Label one wire #10, the other wire #11 and insert the wires into the X23 plug in the corresponding plug location.
   b) LM05 Hoist Body:
      Remove wire #5 from the X1:5 terminal strip*.
      Remove wire #9 from the X1:9 terminal strip*.
      LM10, LM16, LM20; LM25 Hoist Body:
      Remove wire #5 from A2 on the K10 contactor*.
      Remove wire #9 from the X1:9 terminal strip*.
      *These wires should all be connected to the X23 plug.

2. On the LM05 remove the F100 transformer fuse.

3. On the LM05 add the mainline power feed to the load side of the K10 contactor. On the LM10, 16, 20; 25 add the mainline power feed into the normal position.

4. Wire connections between the bridge and hoist.

   Wire #5 E-stop from pushbutton to A2 coil on bridge mainline contactor.
   Wire #9 Bridge forward
   Wire #10 Bridge reverse
   Wire #11 Bridge fast
   Control neutral wire to X1:9 terminal strip
   LM05 Hoist: Control hot wire to X1:1 terminal strip.
   LM10, LM16, LM20; LM25 Hoist: Control hot wire to X1:10 terminal strip.

***Factory not responsible for wiring completed in field. This is just a note to assist in the wiring change.***

## LM05 Single Speed Hoist 208v or 230v – Telemecanique Style Push Button

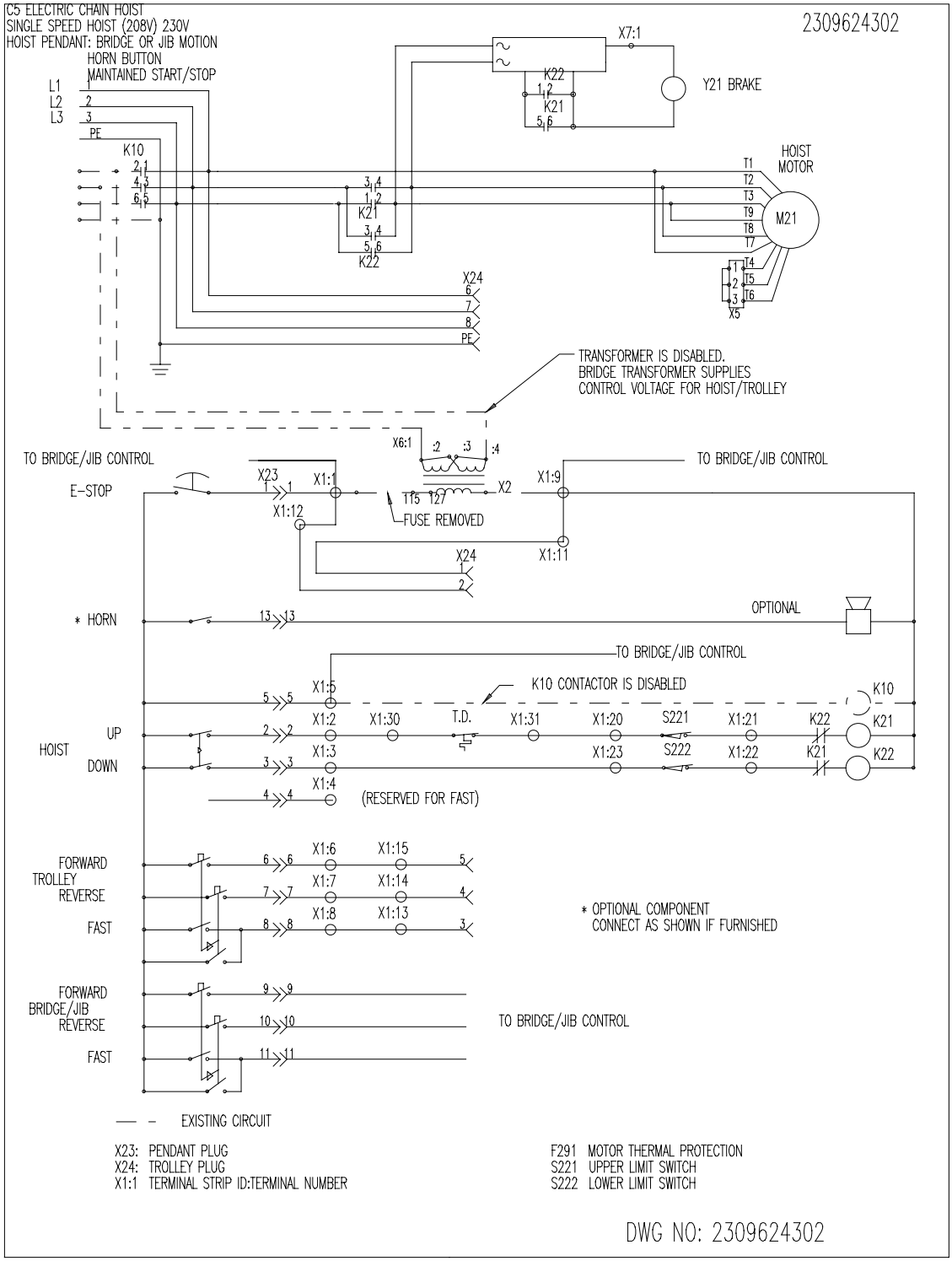

## LM05 Single Speed Hoist 460v - Telemecanique Style Push Button

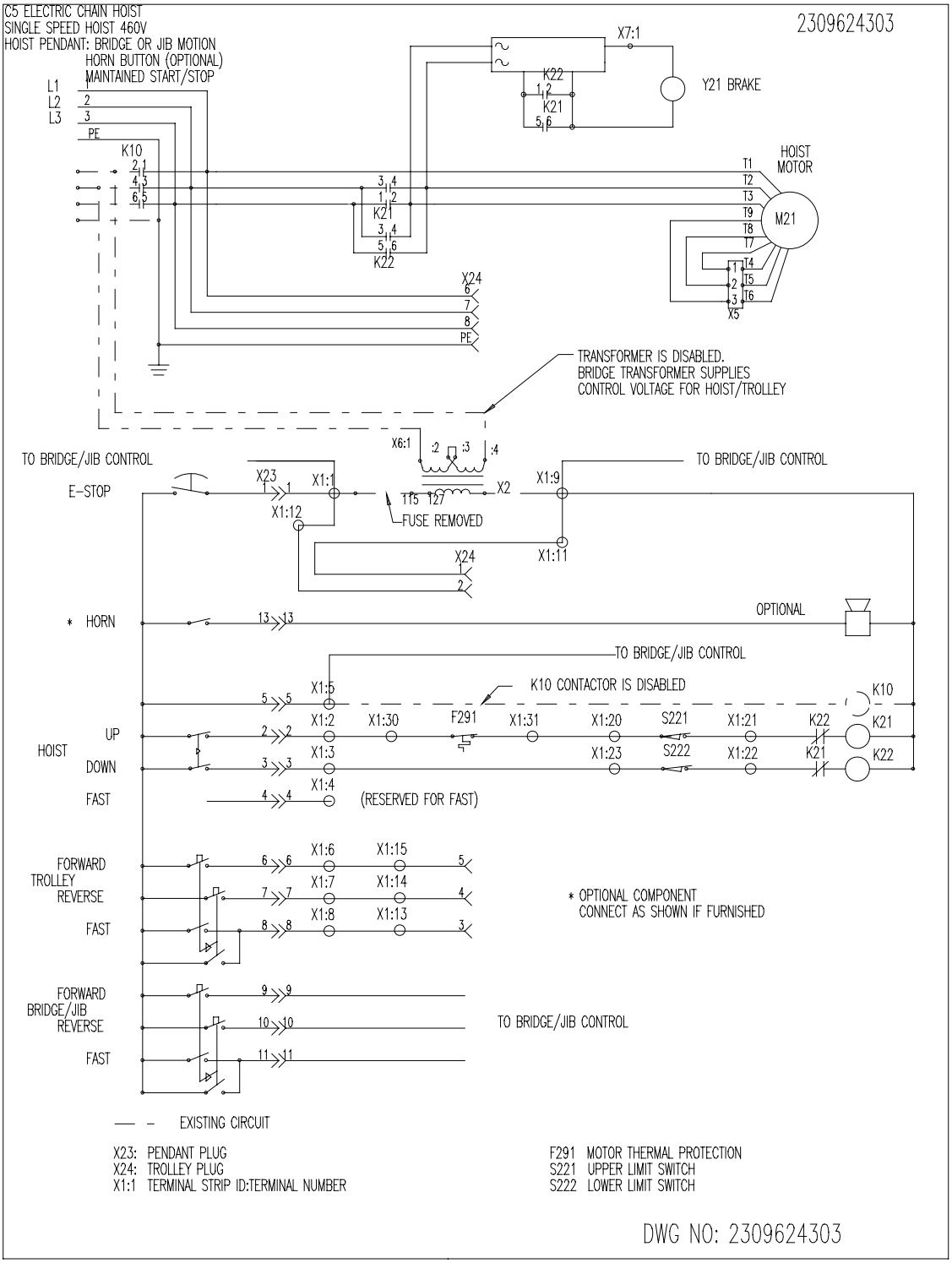

## LM05 Two-Speed Hoist 208v or 230v or 460v - Telemecanique Style Push Button

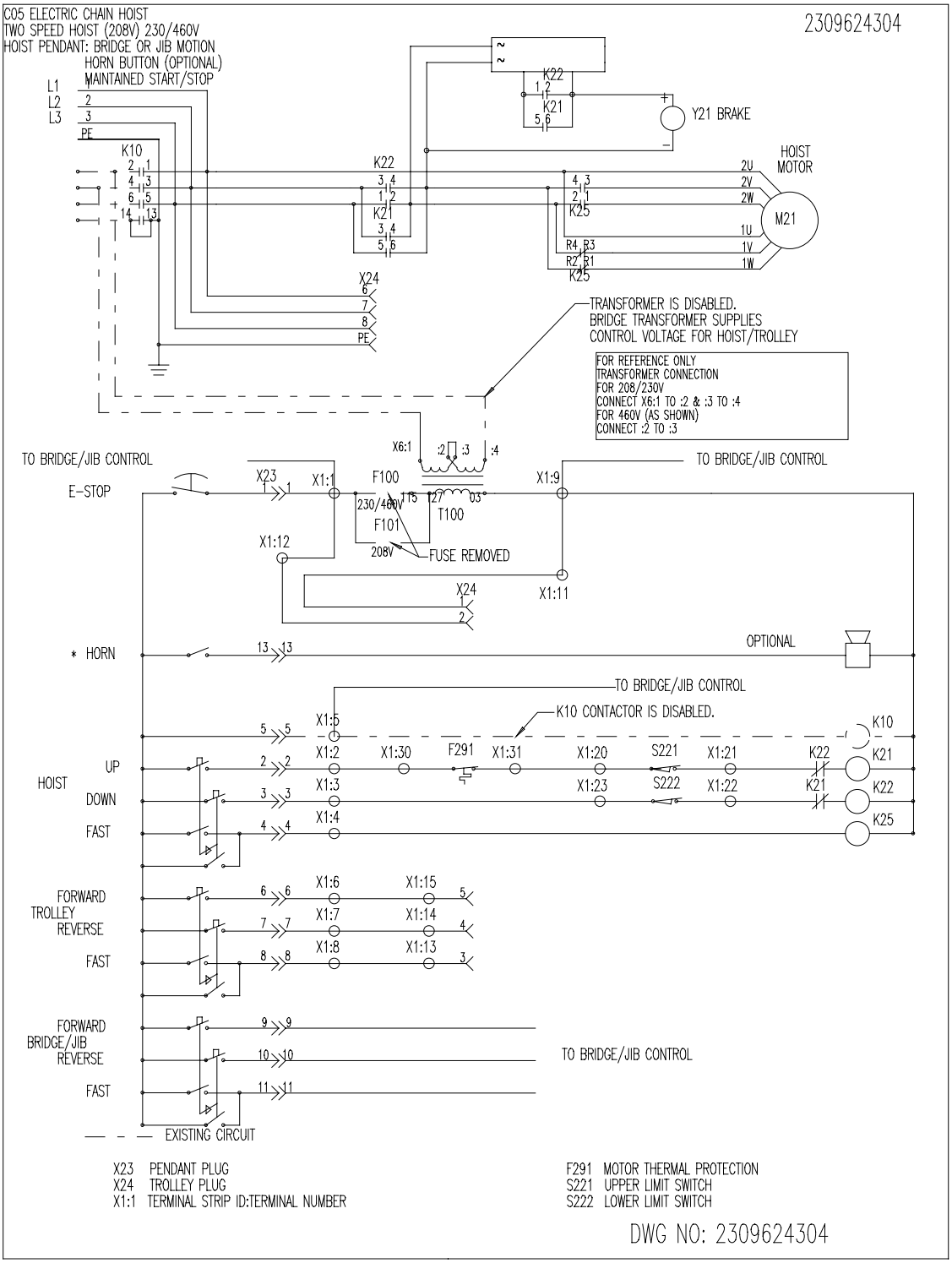

## LM05 Two-Speed Hoist 575v - Telemecanique Style Push Button

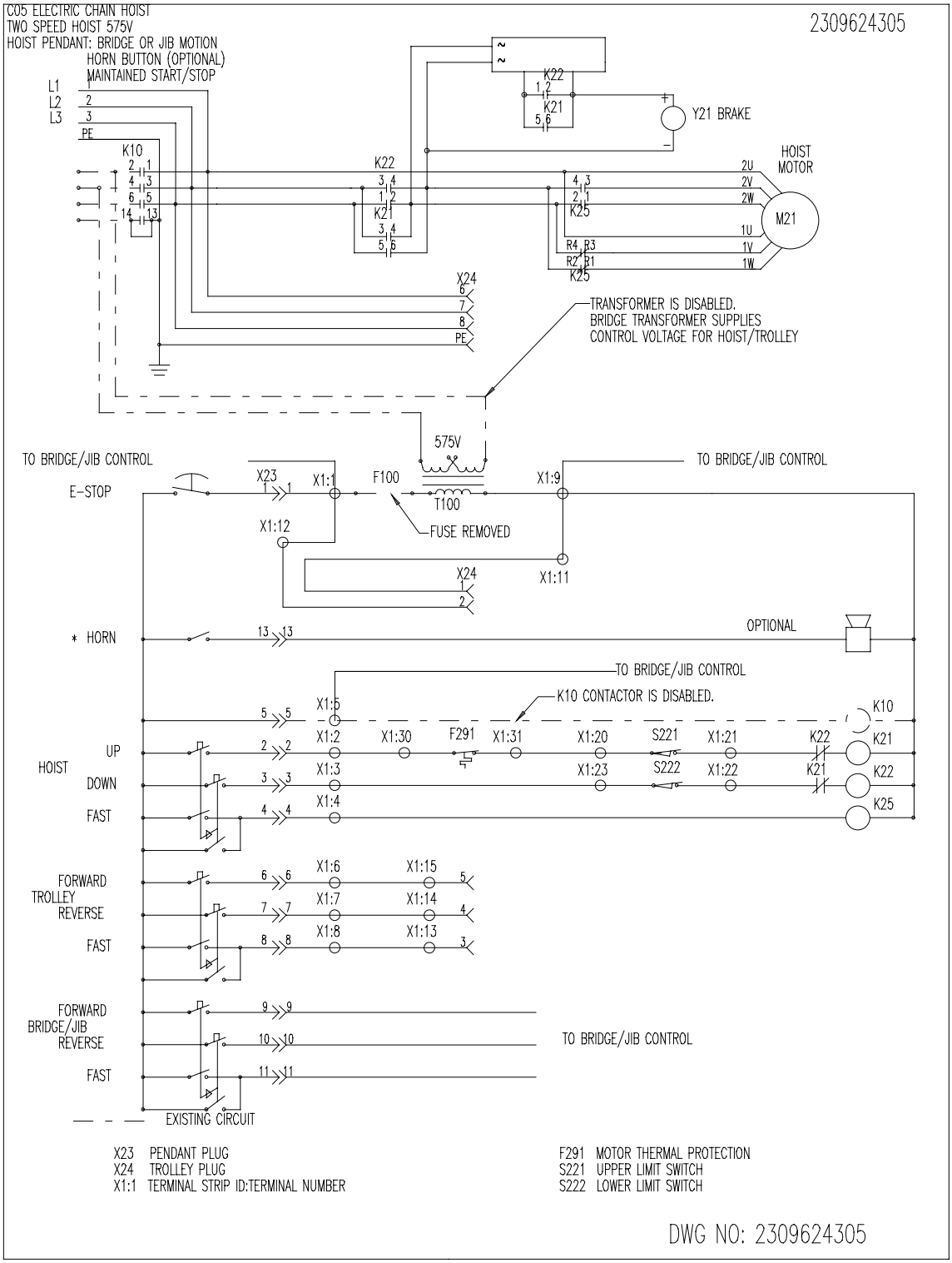

## LM10 Single Speed Hoist 208v or 230v - Telemecanique Style Push Button

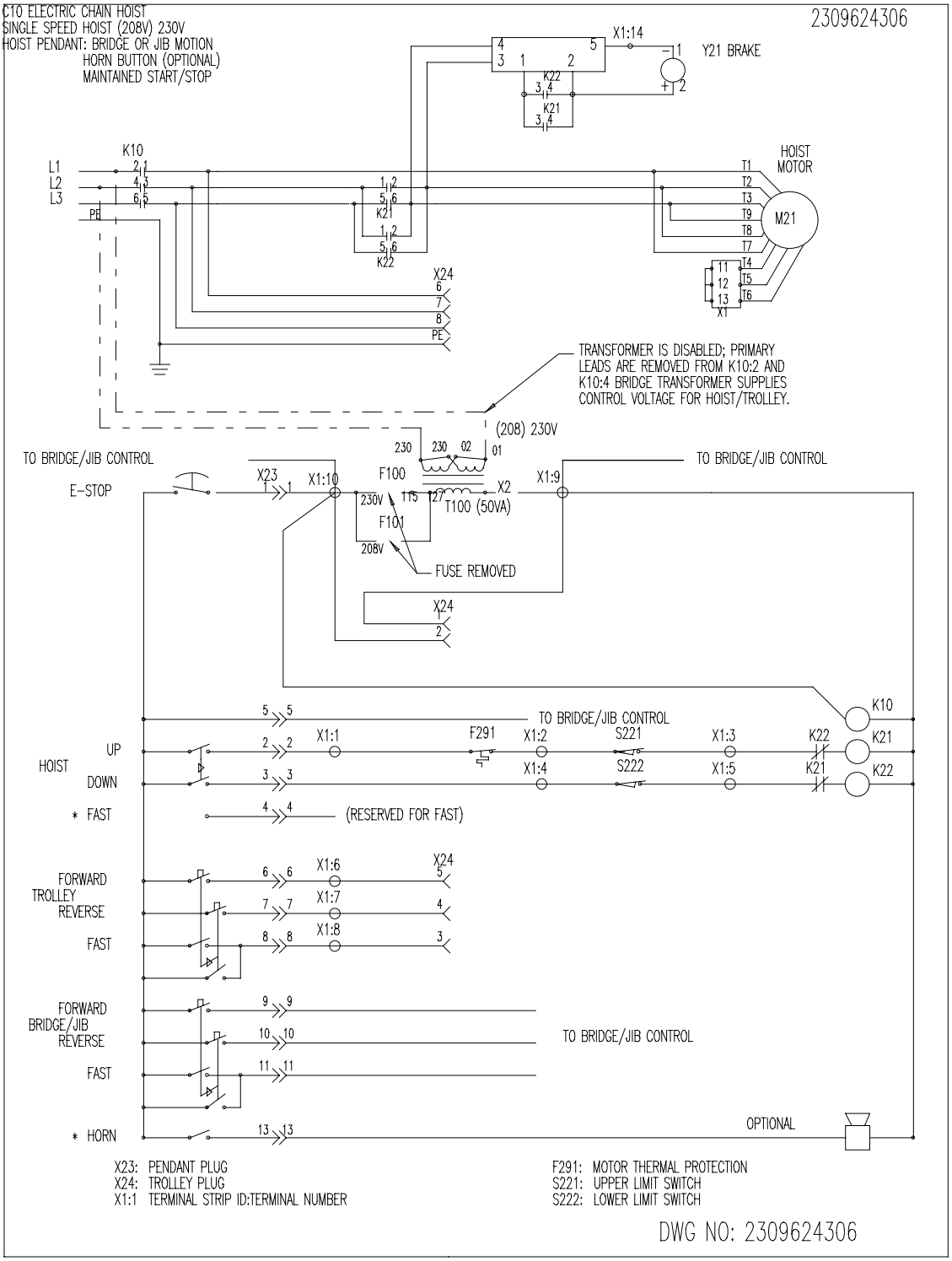

## LM10 Single Speed Hoist 460v - Telemecanique Style Push Button

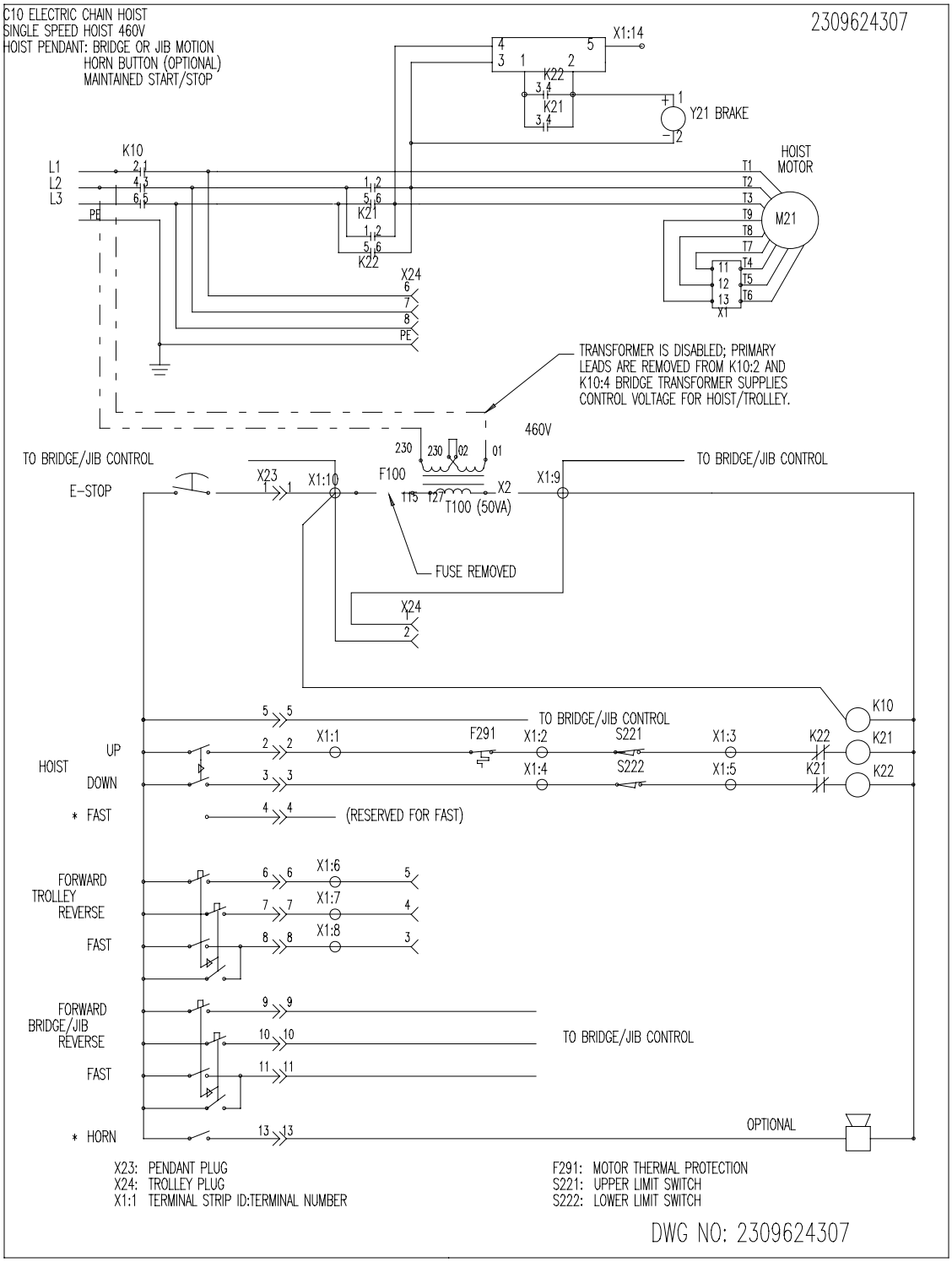

## LM10-16-20-25 Two-Speed Hoist 208v or 230v or 460v - Telemecanique Style Push Button

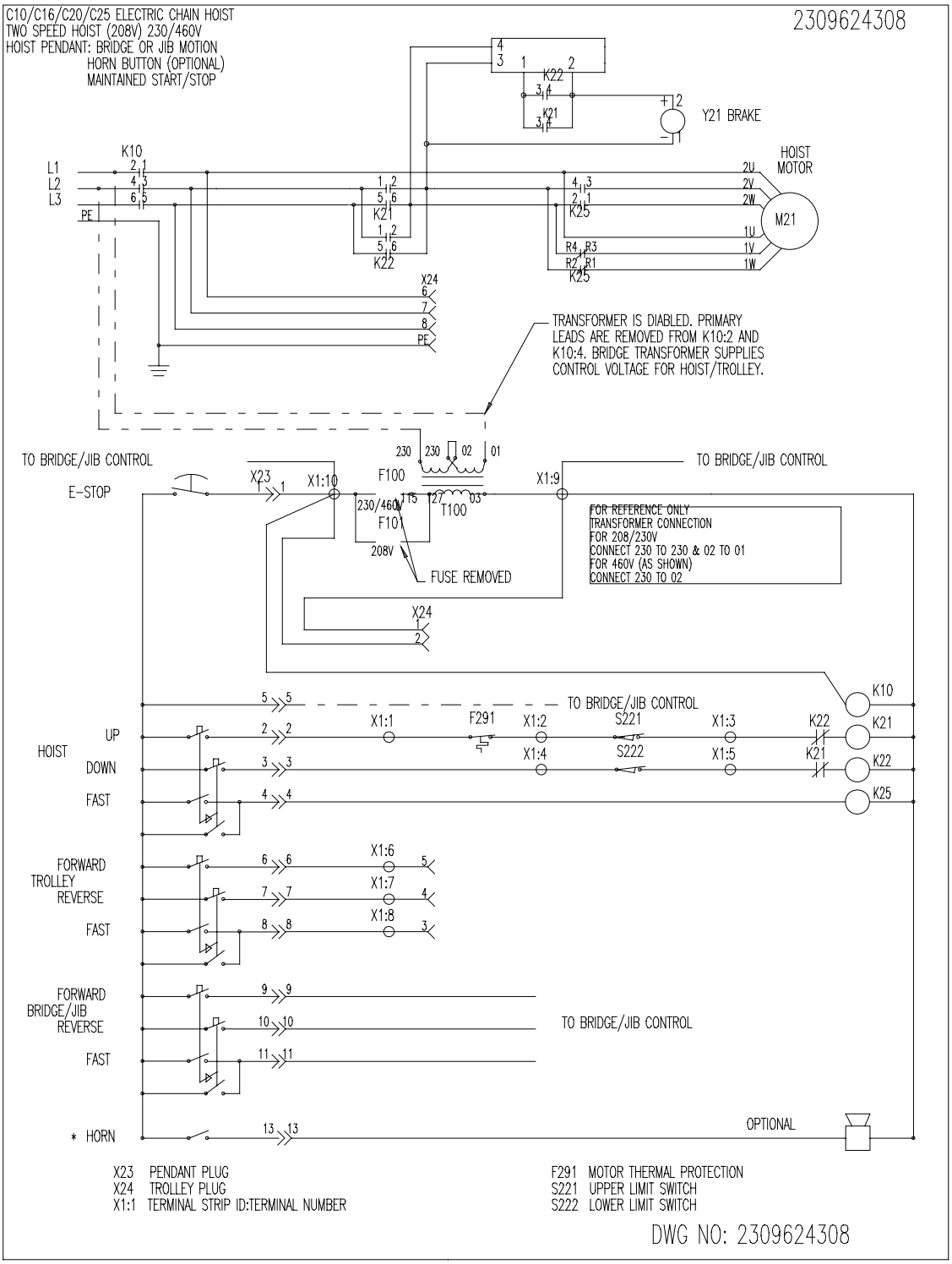

## LM10-16-20-25 Two-Speed Hoist 575v - Telemecanique Style Push Button

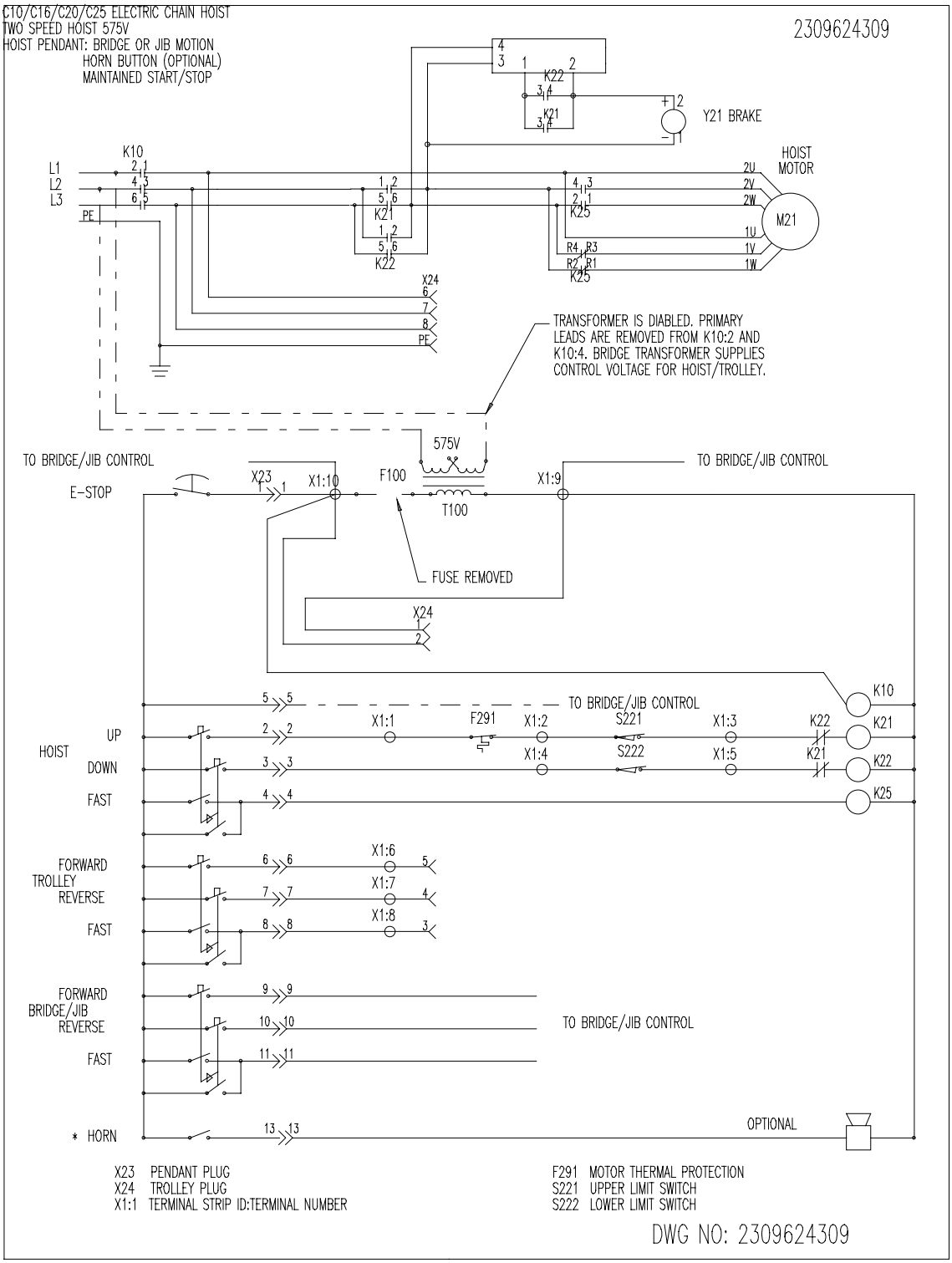

## LM05 Single Speed Hoist 208v or 230v – PBR Style Push Button Pendant

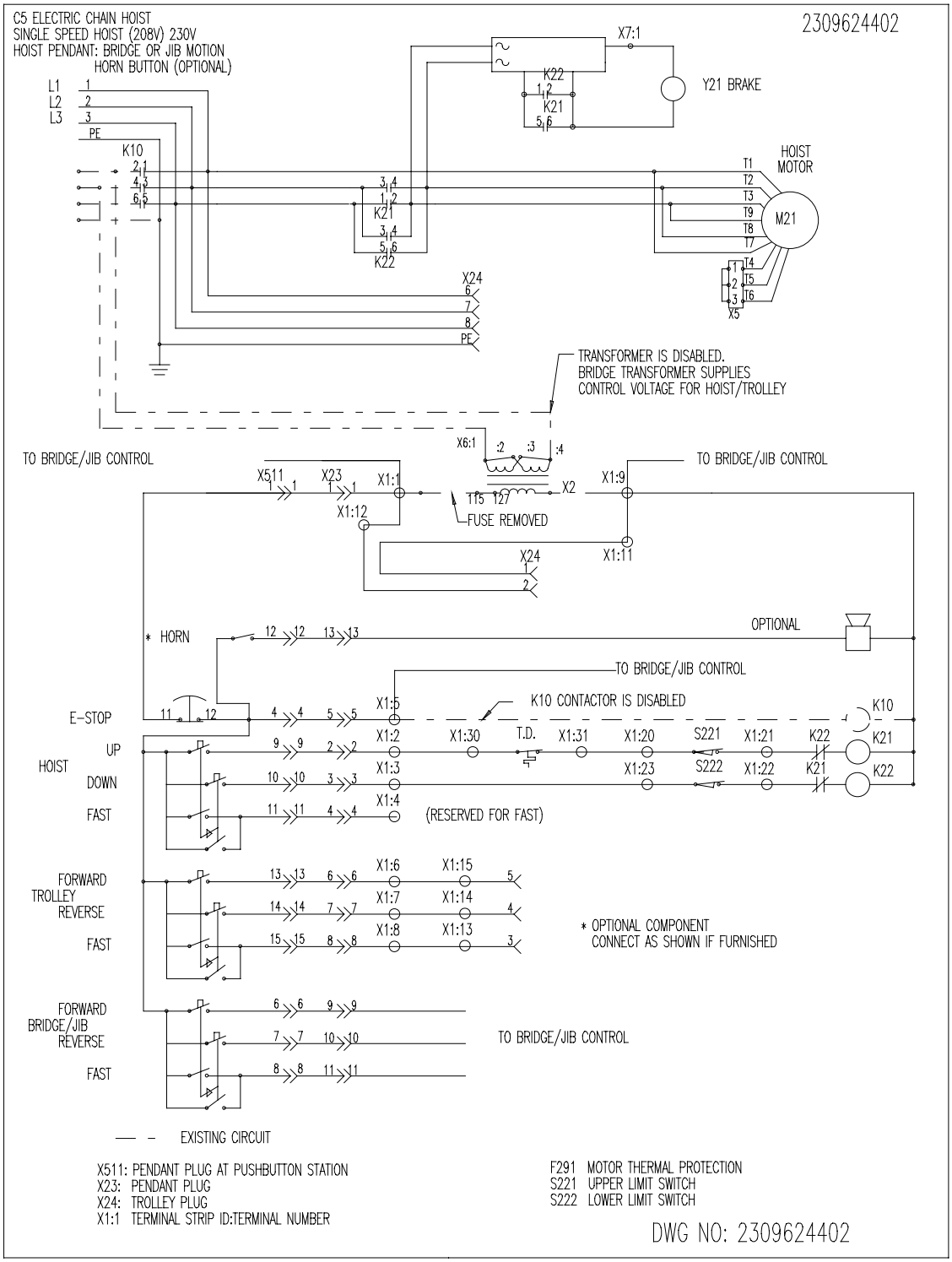

## LM05 Single Speed Hoist 460v – PBR Style Push Button Pendant

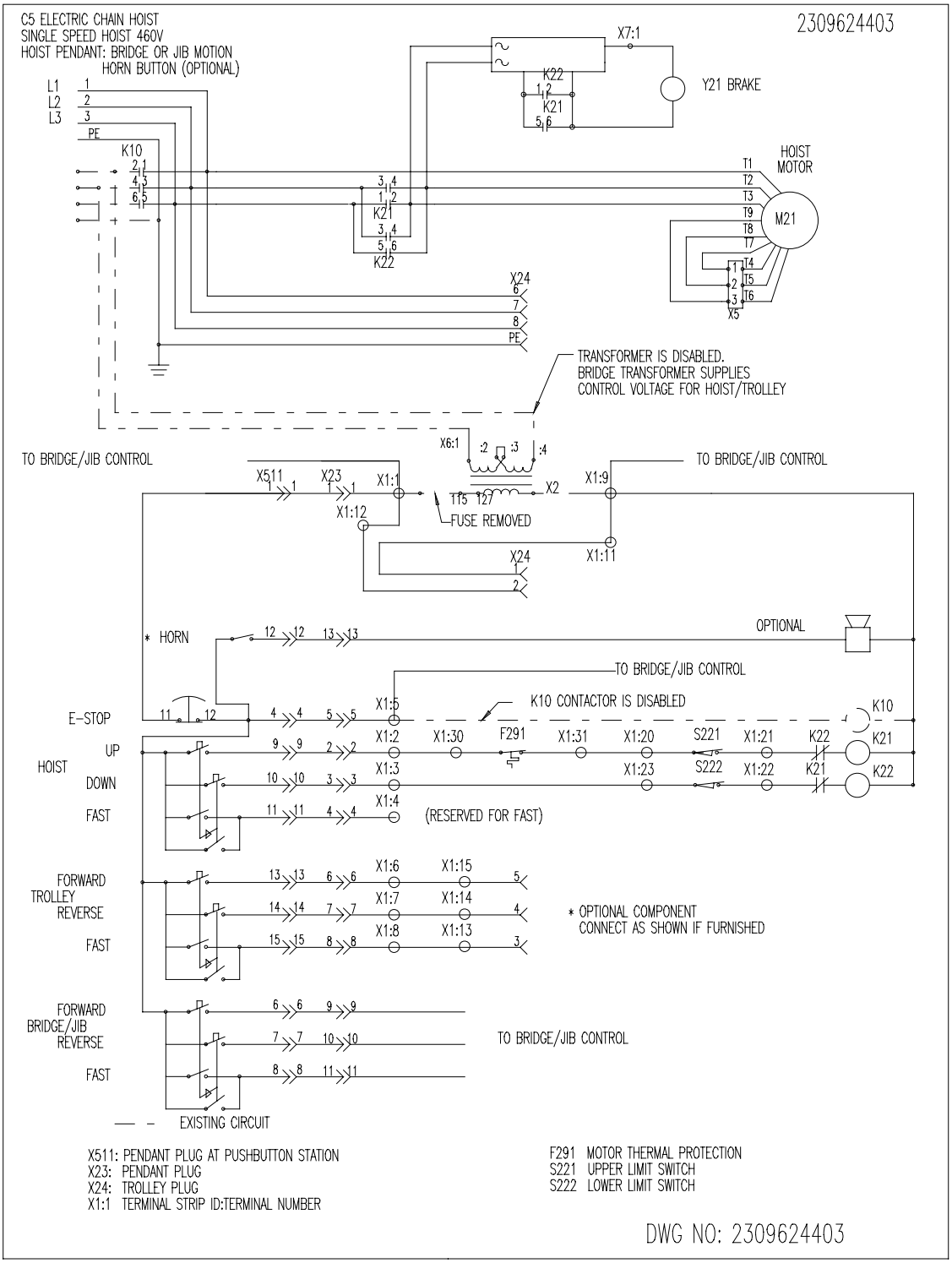

## LM05 Two-Speed Hoist 208v or 230v or 460v – PBR Style Push Button Pendant

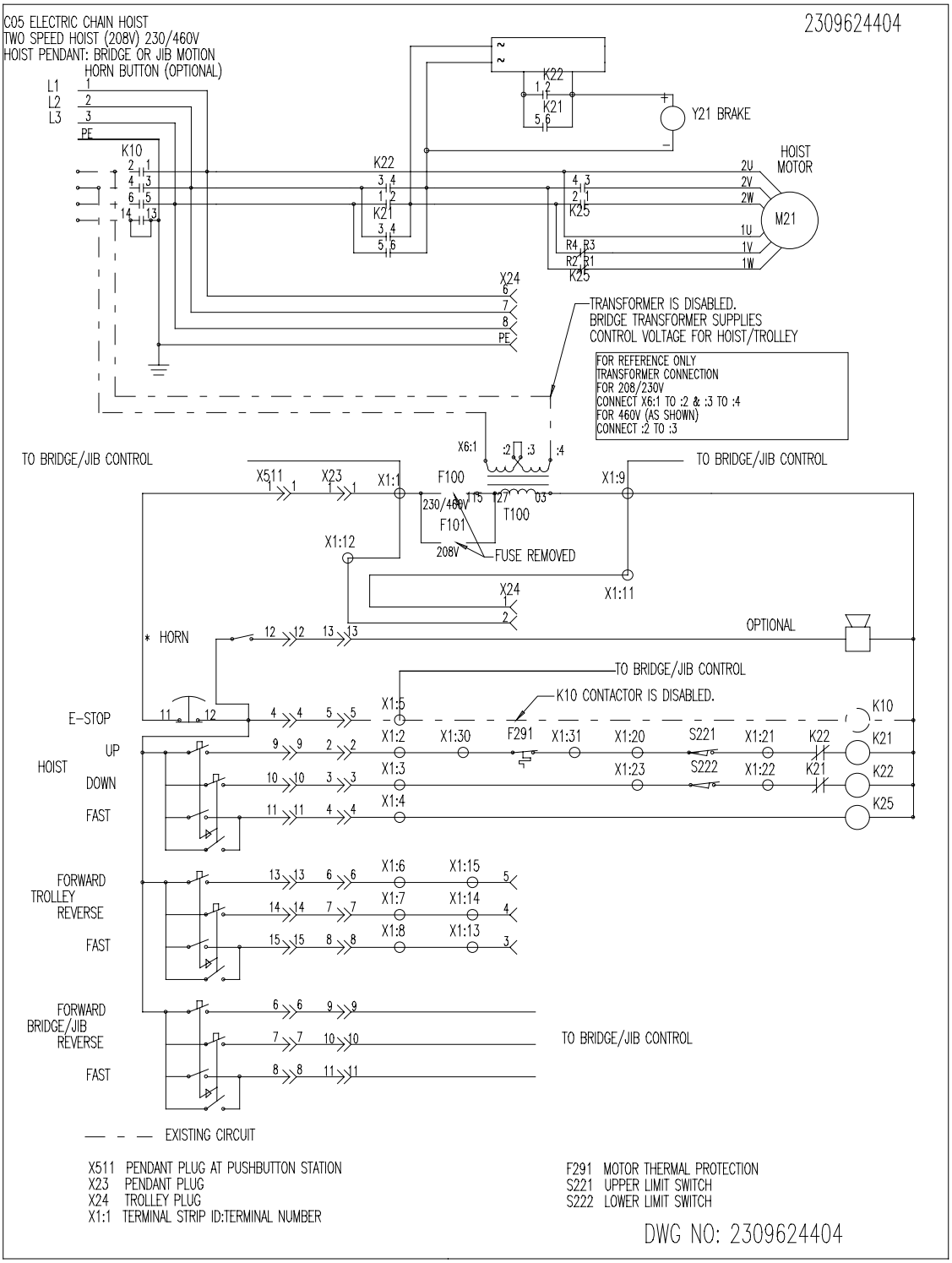

## LM05 Two-Speed Hoist 575v – PBR Style Push Button Pendant

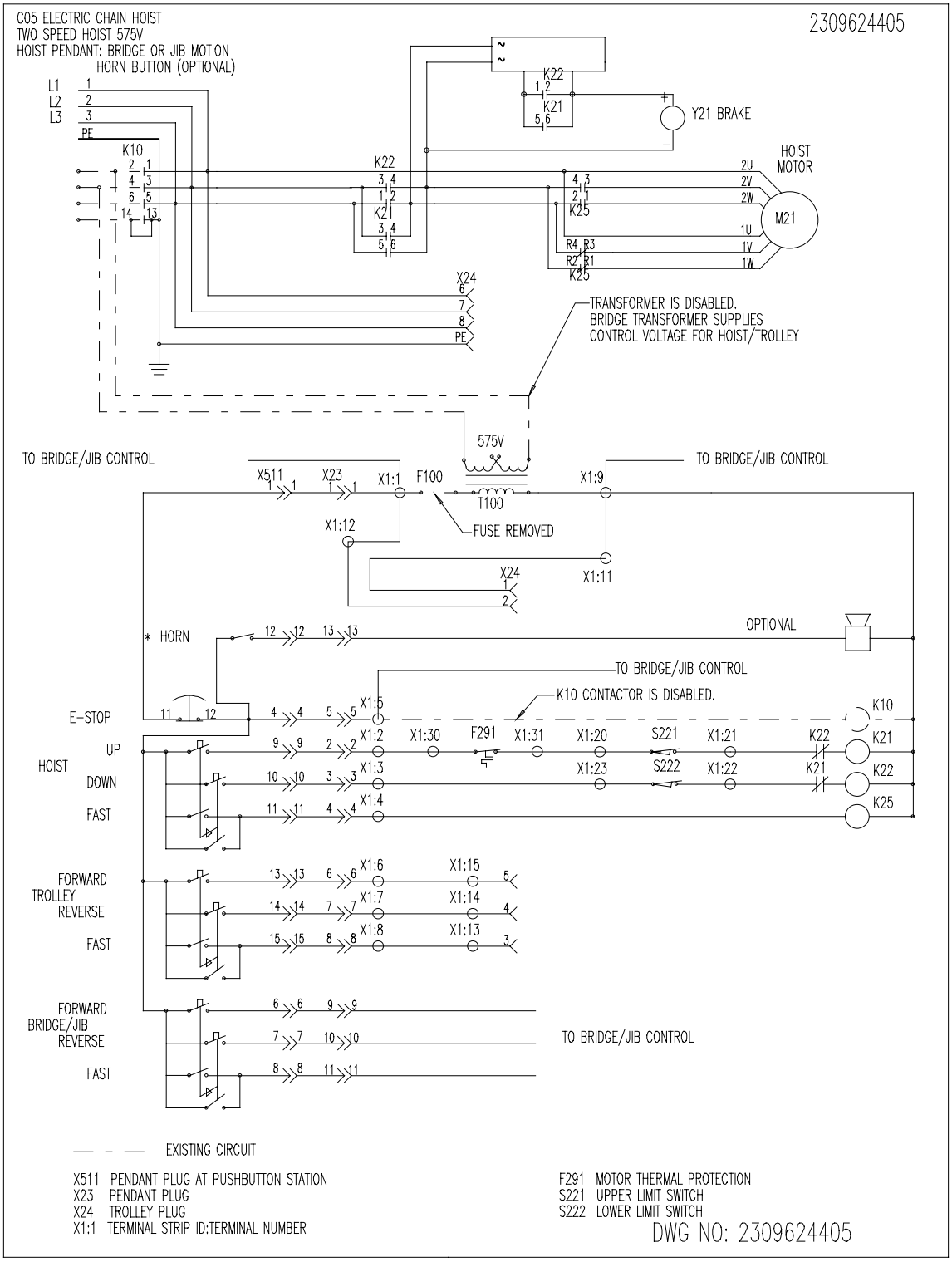

## LM10 Single Speed Hoist 208v or 230v – PBR Style Push Button Pendant

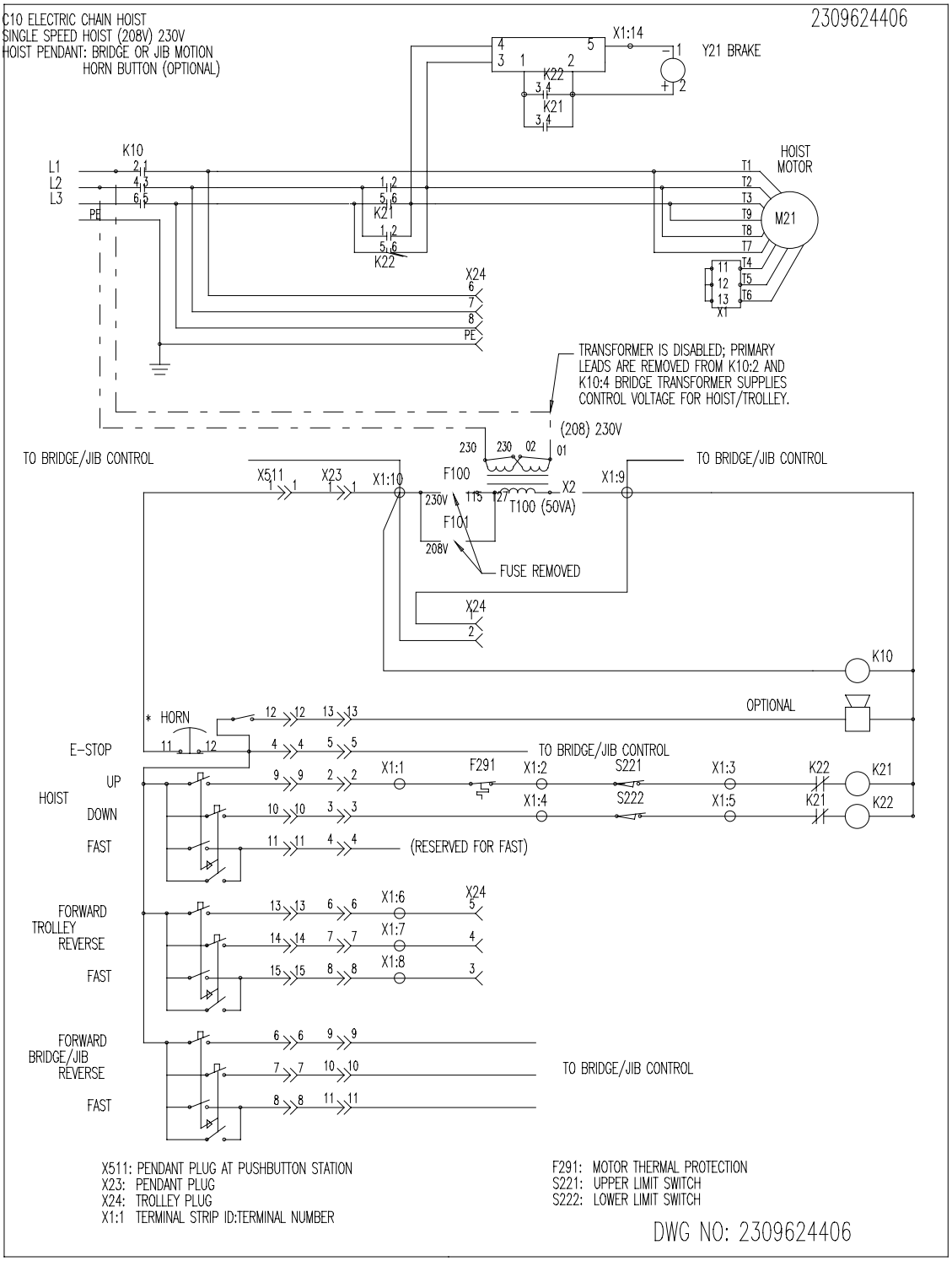

## LM10 Single Speed Hoist 460v – PBR Style Push Button Pendant

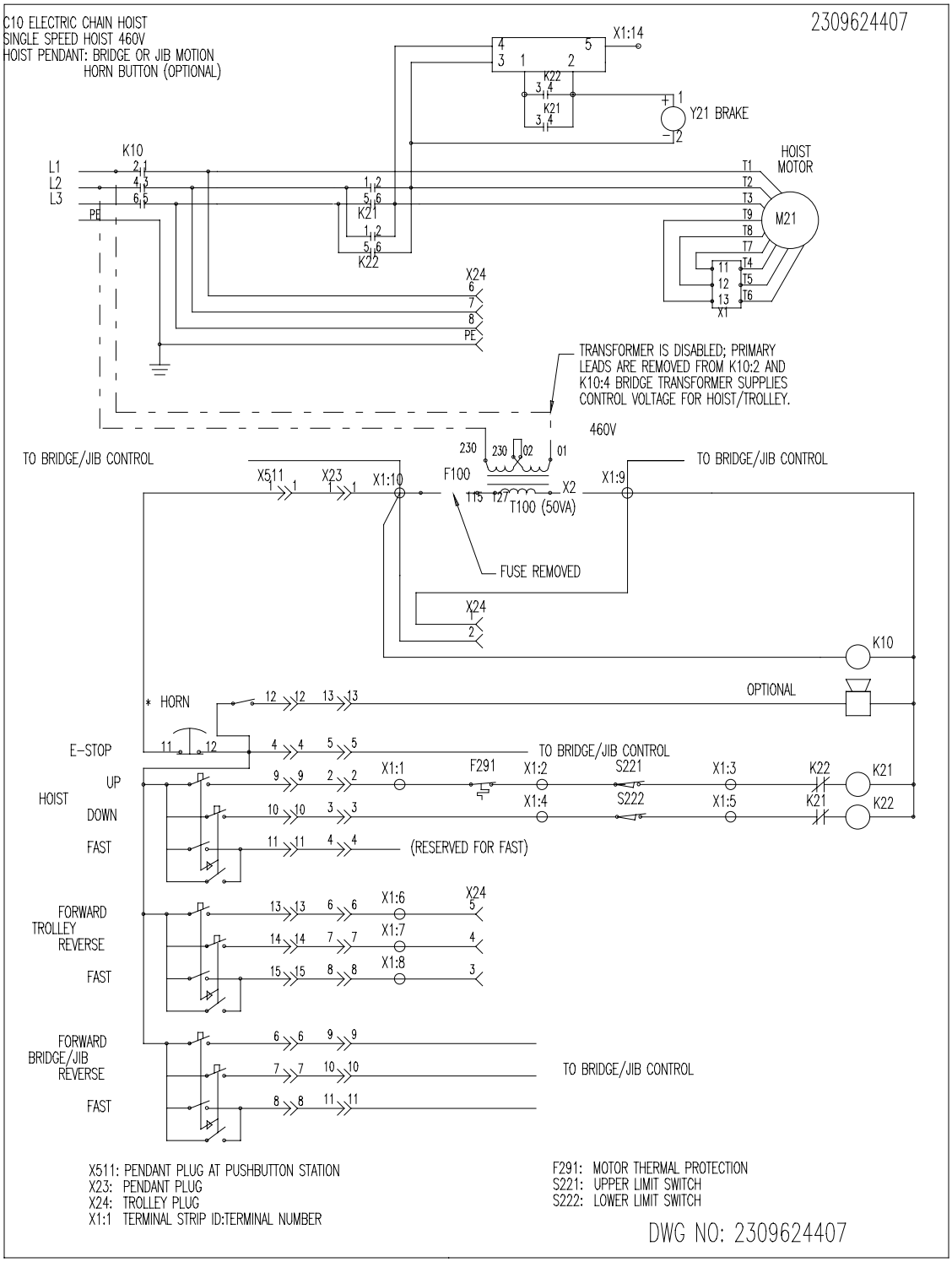

## LM10-16-20-25 Two-Speed Hoist 208v or 230v or 460v – PBR Style Push Button Pendant

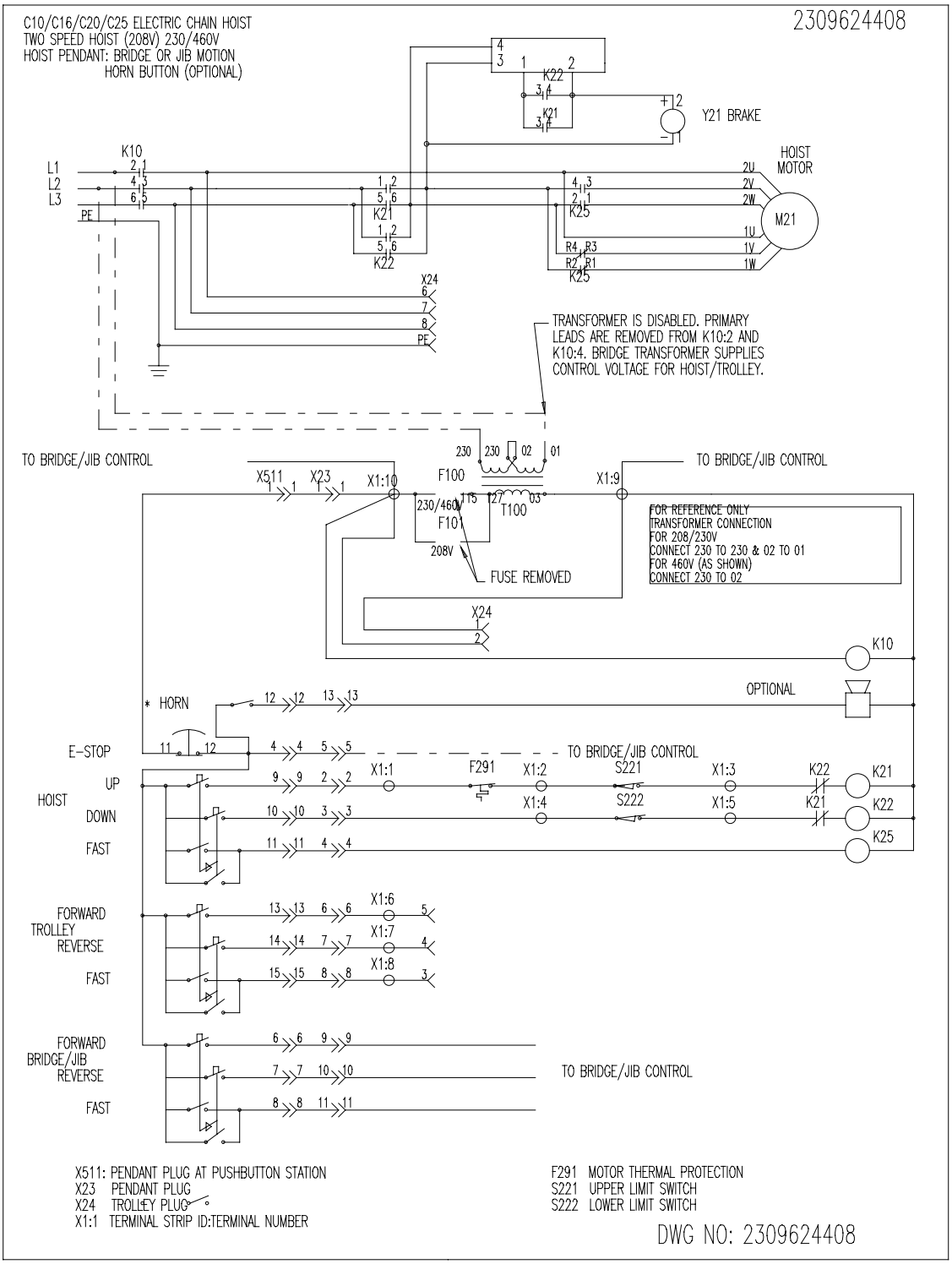

## LM10-16-20-25 Two-Speed Hoist 575v – PBR Style Push Button Pendant