R&M MATERIALS HANDLING

DIMENSIONS

LK25

R&M MATERIALS HANDLING, INC.

Eye suspended (perpendicular version)

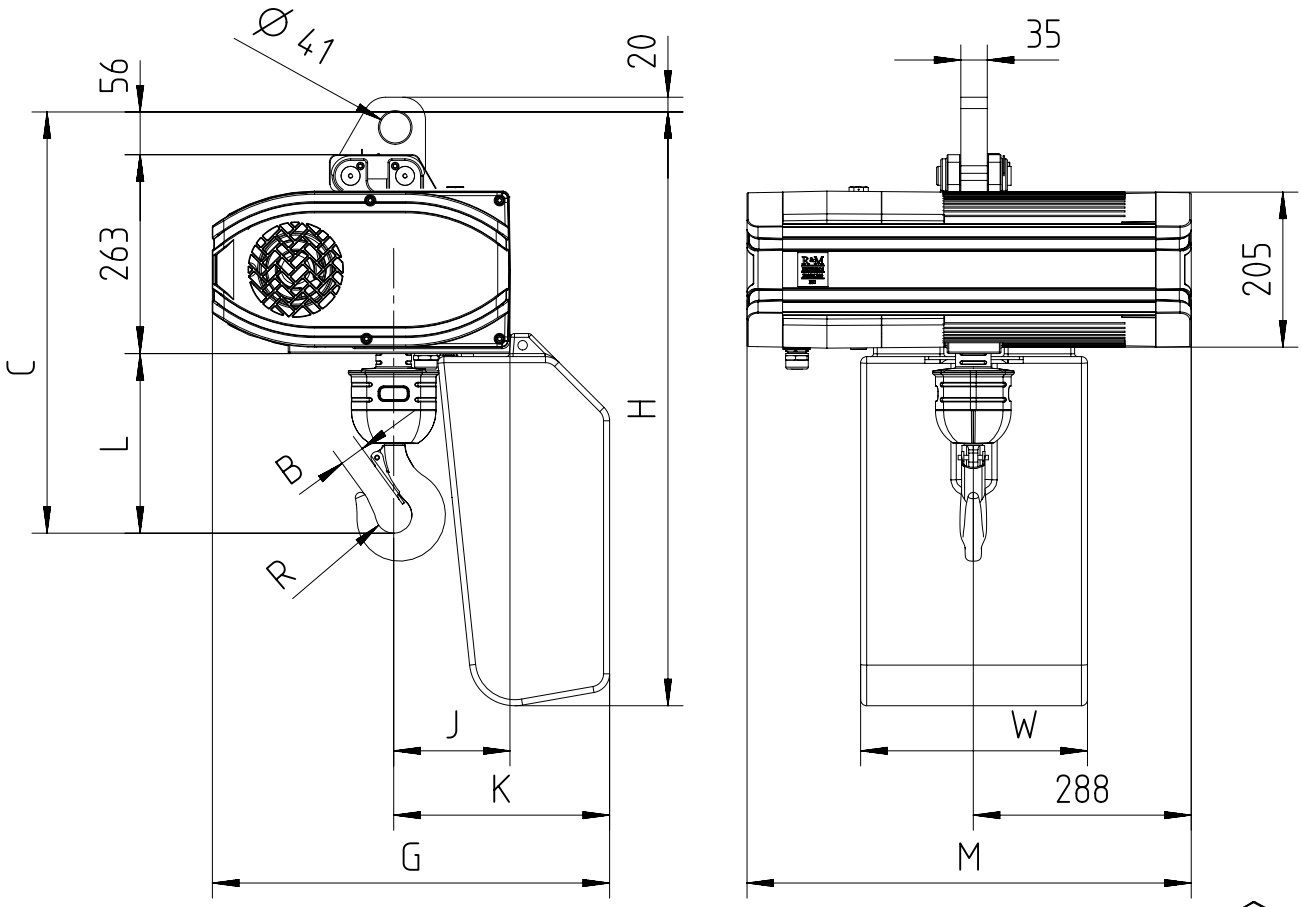

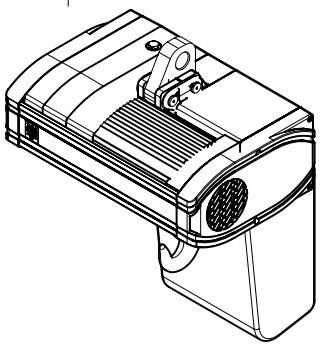

Note: In case of 2-fall hoist, suspension eye is rotated by 180°.
Note: Add 60mm to C & L dimension for hoisting speeds greater than 8 m/min.

Chain Size (mm)	Max load (Kg)	Falls	Chain bag capacity (m)	Dimensions (mm) B	C	L	R	J	K	G	H	W	M LK/ GLS	M DB	Weight of chain (kg/m)	Estimated weight of hoist w/o chain (kg) LK	GLS	DB
11.3X31	2500	1	12	33	558	238	24	154	286	525	785	300	587	709	2.8	108	113	114
			50 (*)						443	682	906							
			80 (*)						515	754	1106							
	5000	2	12 (**)	41	658	388	28	203	334	525	785	300				112	117	118
			50 (*,**)						494	682	906							
			80 (*,**)						563	754	1106							

GLS: Gear Limit Switch
DB : Double Brake

(*) For these heights of lift, customer has to link the chain bag to the structure.
(**) In case of 2-fall hoist, available lifting height is half of the chain bag maximum capacity.

R&M reserves the right to alter or amend the above information without notice.

DISCLOSED WITHOUT PRIOR WRITTEN CONSENT OF THE COMPANY . ANY COPIES OF THIS DOCUMENT MADE BY ANY METHOD MUST ALSO INCLUDE A COPY OF THIS LEGEND.

53481906
53481906-PDF1
05/07/2016